ALLEN&HEATH

XONE:92

PROFESSIONAL DJ MIXER

USER GUIDE

Publication AP5345

Limited One Year Warranty

This product is warranted to be free from defects in materials or workmanship for period of one year from the date of purchase by the original owner.

To ensure a high level of performance and reliability for which this equipment has been designed and manufactured, read this User Guide before operating. In the event of a failure, notify and return the defective unit to ALLEN & HEATH Limited or its authorised agent as soon as possible for repair under warranty subject to the following conditions

Conditions Of Warranty

1. The equipment has been installed and operated in accordance with the instructions in this User Guide
2. The equipment has not been subject to misuse either intended or accidental, neglect, or alteration other than as described in the User Guide or Service Manual, or approved by ALLEN & HEATH.
3. Any necessary adjustment, alteration or repair has been carried out by ALLEN & HEATH or its authorised agent.
4. This warranty does not cover fader wear and tear.
5. The defective unit is to be returned carriage prepaid to ALLEN & HEATH or its authorised agent with proof of purchase.
6. Units returned should be packed to avoid transit damage.

In certain territories the terms may vary. Check with your ALLEN & HEATH agent for any additional warranty which may apply.

CE This product complies with the European Electromagnetic Compatibility directives 89/336/EEC & 92/31/EEC and the European Low Voltage Directives 73/23/EEC & 93/68/EEC.

This product has been tested to EN55103 Parts 1 & 2 1996 for use in Environments E1, E2, E3, and E4 to demonstrate compliance with the protection requirements in the European EMC directive 89/336/EEC. During some tests the specified performance figures of the product were affected. This is considered permissible and the product has been passed as acceptable for its intended use. Allen & Heath has a strict policy of ensuring all products are tested to the latest safety and EMC standards. Customers requiring more information about EMC and safety issues can contact Allen & Heath.

NOTE: Any changes or modifications to the console not approved by Allen & Heath could void the compliance of the console and therefore the users authority to operate it.

XONE:92 User Guide AP5345 Issue 4

Copyright © 2005 Allen & Heath Limited. All rights reserved

ALLEN&HEATH
Allen & Heath Limited
Kernick Industrial Estate, Penryn, Cornwall, TR10 9LU, UK

http://www.allen-heath.com

Important Safety Instructions

WARNINGS - Read the following before proceeding :

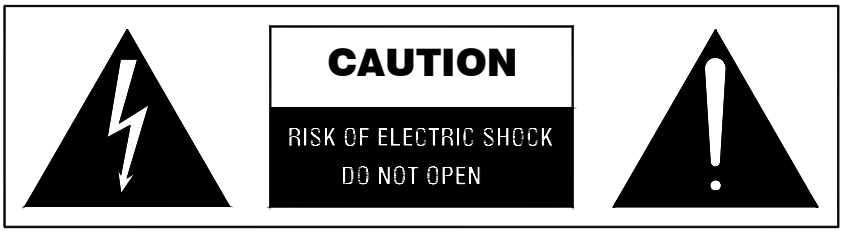

ATTENTION: RISQUE DE CHOC ELECTRIQUE – NE PAS OUVRIR

Read instructions: Retain these safety and operating instructions for future reference. Adhere to all warnings printed here and on the console. Follow the operating instructions printed in this User Guide.

Do not remove cover: Operate the console with its covers correctly fitted. Disconnect mains power by unplugging the power cord if the cover needs to be removed for setting internal options. Refer this work to competent technical personnel only.

Power sources: Connect the console to a mains power only of the type described in this User Guide and marked on the rear panel. Use the power cord with sealed mains plug appropriate for your local mains supply as provided with the console. If the provided plug does not fit into your outlet consult your service agent for assistance.

Power cord routing: Route the power cord so that it is not likely to be walked on, stretched or pinched by items placed upon or against it.

Grounding: Do not defeat the grounding and polarisation means of the power cord plug. Do not remove or tamper with the ground connection in the power cord.

WARNING: This equipment must be earthed.

Water and moisture: To reduce the risk of fire or electric shock do not expose the console to rain or moisture or use it in damp or wet conditions. Do not place containers of liquids on it which might spill into any openings.

Ventilation: Do not obstruct the ventilation slots or position the console where the air flow required for ventilation is impeded. If the console is to be operated in a rack unit or flightcase ensure that it is constructed to allow adequate ventilation.

Heat and vibration: Do not locate the console in a place subject to excessive heat or direct sunlight as this could be a fire hazard. Locate the console away from any equipment which produces heat or causes excessive vibration.

Servicing: Switch off the equipment and unplug the power cord immediately if it is exposed to moisture, spilled liquid, objects fallen into the openings, the power cord or plug become damaged, during lightening storms, or if smoke, odour or noise is noticed. Refer servicing to qualified technical personnel only.

Installation: Install the console in accordance with the instructions printed in this User Guide. Do not connect the output of power amplifiers directly to the console. Use audio connectors and plugs only for their intended purpose.

Important Mains plug wiring instructions.

The console is supplied with a moulded mains plug fitted to the AC mains power lead. Follow the instructions below if the mains plug has to be replaced.

The wires in the mains lead are coloured in accordance with the following code:

TERMINAL		WIRE COLOUR	
		European	USA/Canada
L	LIVE	BROWN	BLACK
N	NEUTRAL	BLUE	WHITE
E	EARTH GND	GREEN & YELLOW	GREEN

The wire which is coloured Green and Yellow must be connected to the terminal in the plug which is marked with the letter E or with the Earth symbol. **This appliance must be earthed.**

The wire which is coloured Blue must be connected to the terminal in the plug which is marked with the letter N.

The wire which is coloured Brown must be connected to the terminal in the plug which is marked with the letter L.

Ensure that these colour codes are followed carefully in the event of the plug being changed.

Precautions

Damage : To prevent damage to the controls and cosmetics avoid placing heavy objects on the control surface, scratching the surface with sharp objects, or rough handling and vibration.

Environment : Protect from excessive dirt, dust, heat and vibration when operating and storing. Avoid tobacco ash, smoke, drinks spillage, and exposure to rain and moisture. If the console becomes wet, switch off and remove mains power immediately. Allow to dry out thoroughly before using again.

Cleaning : Avoid the use of chemicals, abrasives or solvents. The control panel is best cleaned with a soft brush and dry lint-free cloth. The faders, switches and potentiometers are lubricated for life. The use of electrical lubricants on these parts is not recommended.

Transporting : The console may be transported as a free-standing unit or mounted in a rack or flightcase. Protect the controls from damage during transit. Use adequate packing if you need to ship the unit.

Hearing :

To avoid damage to your hearing do not operate any sound system at excessively high volume. This also applies to any close-to-ear monitoring such as headphones. Continued exposure to high volume sound can cause frequency selective or wide range hearing loss. Make sure that your system complies with any venue sound level and noise regulations which may apply.

Introduction

This user guide presents a quick reference to the **XONE:92.** We recommend that you read this fully before starting. Included is information on installing, connecting and operating the console, panel drawings, system block diagram and technical specification. For further information on the basic principles of audio system engineering, please refer to one of the specialist publications available from bookshops and audio equipment dealers.

Whilst we believe the information in this guide to be reliable we do not assume responsibility for inaccuracies. We also reserve the right to make changes in the interest of further product development.

We are able to offer further product support through our world-wide network of approved dealers and service agents. You can also access our Web site on the Internet for information on our product range, assistance with your technical queries or simply to chat about matters audio. To help us provide the most efficient service please keep a record of your console serial number, and date and place of purchase to be quoted in any communication regarding this product.

Check out our web site for information on the company and its pedigree, our full product range and our design philosophy. We also have a site dedicated to the exciting **XONE** console range.

www.allen-heath.com

www.xone.co.uk

Contents

Warranty 2
Important Safety Instructions 3
Precautions 4
Front and Rear Panel Drawings 6
Welcome to the **XONE:92** 7
The Application 9
Quick Start 10
Gain and Operating Levels 13
Connecting Mains Power 14
Earthing 14
Plugging up the System 15
Cables and Connectors 16
MIC/RTN Input Channel 18
PHONO/LINE Input Channel 20
Crossfader and VCF 22
Replacing the Crossfader 23
LFO Modulation 24
Filters Type Select 25
Master Mix and Monitor System 26
MIDI Control of External Devices 28
MIDI Control Codes 29
MIDI Implementation Chart 30
Glossary 31
Specifications 34
Block Diagram 35
Glossary 27
Installer Link Options 36
Cue Sheet 39
Internet Site ..... Rear Cover

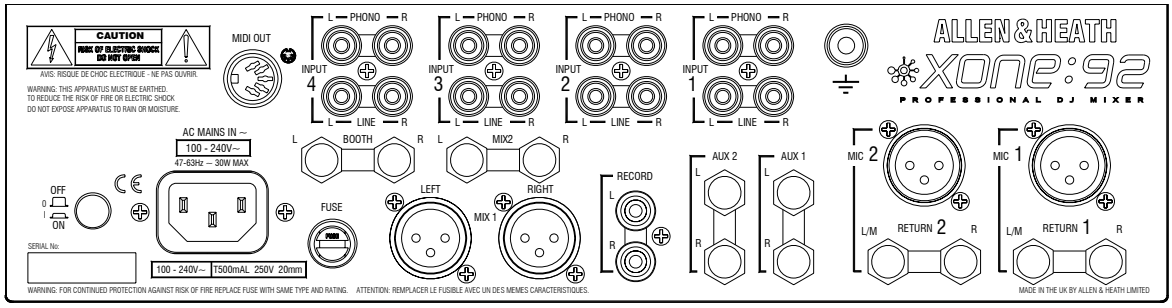

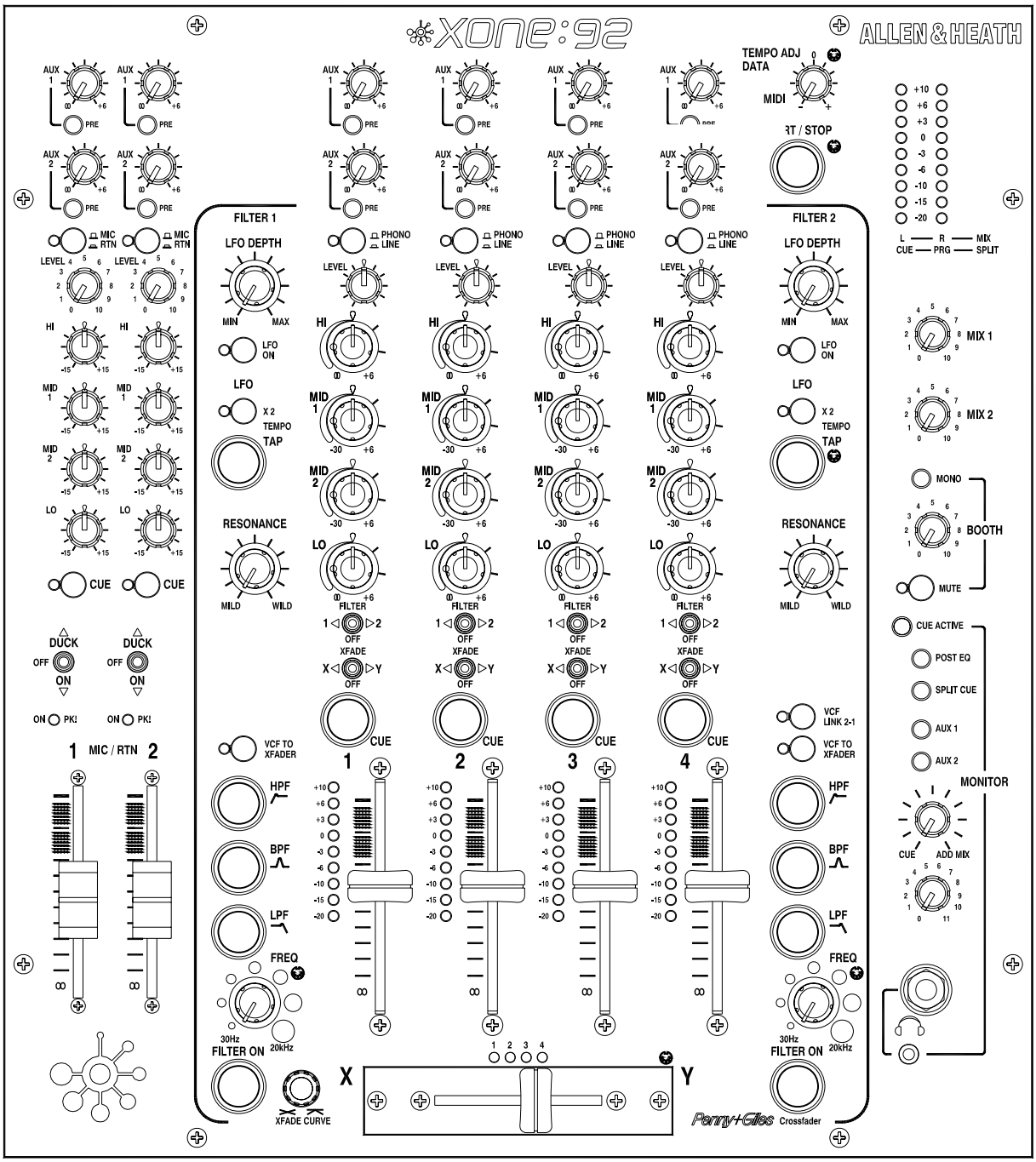

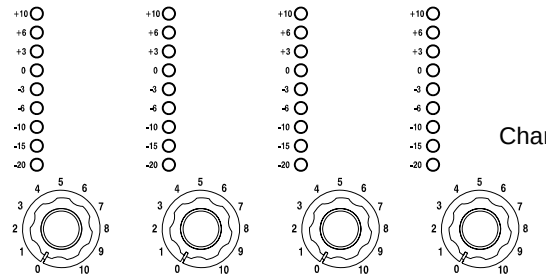

Channel faders for Rotary version.

Welcome to the XONE:92

The Allen & Heath **XONE:92** presents a unique combination of performance tools for the professional DJ in a stylish and solidly built club format. Above all, it features sound quality second to none. **XONE:92** has been designed and constructed using the same rigorous standards we apply to our large format professional consoles used and respected by top engineers throughout the world.

XONE:92 provides **6 dual stereo channels**, two offering mic inputs, adding up to a massive 10 stereo and 2 microphone inputs. A full range of connectors means that you can connect up to 4 turntables, 2 mics, CD players, MD players, drum machines, samplers, and pretty much anything else you might want to bring into the mix.

MIDI (Musical Instrument Digital Interface) allows featured front panel controls to transmit MIDI data to enable remote control of external effects, samplers, sequencers etc. Tap Tempo related MIDI clocks are also transmitted to provide synchronisation of MIDI sound modules to pre-recorded sources playing through the mixer.

4 BAND EQ controls rather than the usual 3 for greater creativity. Each band has a safe +6dB boost. The HI and LO bands have infinite attenuation (total kill) with a sharp 12dB/oct roll-off and the MID bands have a massive -30dB of cut, enough to shape your sound well beyond normal EQ range, and without overloading your system.

Stereo channels use high quality **twin rail linear or rotary VCA faders**. These control the audio using DC voltages meaning that they can take a huge amount of punishment without the bangs and crackles that inevitably creep in on regular audio faders. The high spec Penny & Giles **VCA crossfader** is easily removable from the top panel for quick replacement should it become worn. The curve can be swept between dipped response, ideal for seamless beat mixing, and fast-attack, suitable for scratch or cut mixing.

Unique to **XONE**, two stereo state variable **Voltage Controlled Filters** provide the DJ with a new level of live performance creativity. These are very similar to those found on classic analogue synths but benefit from modern, quiet and stable technology. Use these to sweep the sound by accentuating or cutting frequencies from 30Hz to 20kHz. The 3 filter types HPF, BPF and LPF can be combined to create many more amazing effects. **Low Frequency Oscillator** controls enable cyclic LFO changes to be applied to each filter. A large Resonance control changes the 'Q' or sharpness of the filter effect from subtle to extreme. Each VCF has its own 'ON' switch.

Combined with the extensive output and monitoring features, colour coded indicators, stylish layout and clear graphics visible in all lighting situations, you have an unbeatable performance console equally at home in dance clubs, home set-ups, live venues, and on the road.

- 6 Dual stereo inputs, 2 with mic inputs
- RIAA preamps for up to 4 turntables
- Input selectors with 2 colour indicators
- Smooth action level controls
- 2 Stereo aux sends with pre/post switching
- 4 band EQ - high definition of frequency bands, with 'infinite kill' on HF and LF; wide Q for cut, narrow Q for boost
- MIDI output from VCF 1+2, crossfader, LFO 2 (MIDI clock), dedicated data control and start/stop button
- Large 'light-pipe' illuminated cue switches
- 9 led 3 colour channel 'bulls eye' LED meters
- Crossfader and Filter assign switches
- Either smooth travel 60mm VCA faders or rotary VCA faders (Linear or Rotary versions)
- Active Penny & Giles VCA crossfader allowing contour to be set from smooth to scratch mix
- Cue/Mix monitor balance control
- 2 Independent mix outputs
- 2 Rotary master level controls
- Dual stereo analogue VCF effects
- 3 Filter modes combine for more effects
- Independent frequency sweep controls
- Resonance control for subtle or wild effects
- Filter LFO Depth and tempo controls
- Illuminated Filter switches punch effect in or out
- Powerful headphones monitor with auto cue
- Headphones split cue and Aux 1 & 2 monitoring
- Stereo music only booth monitor output
- Booth mono and mute switching
- 9 led 3 colour main 'bulls eye' LED meters
- Balanced +4dBu XLR stereo Mix 1 output
- Impedance balanced Line stereo Mix 2 output
- Pre-fade recording output

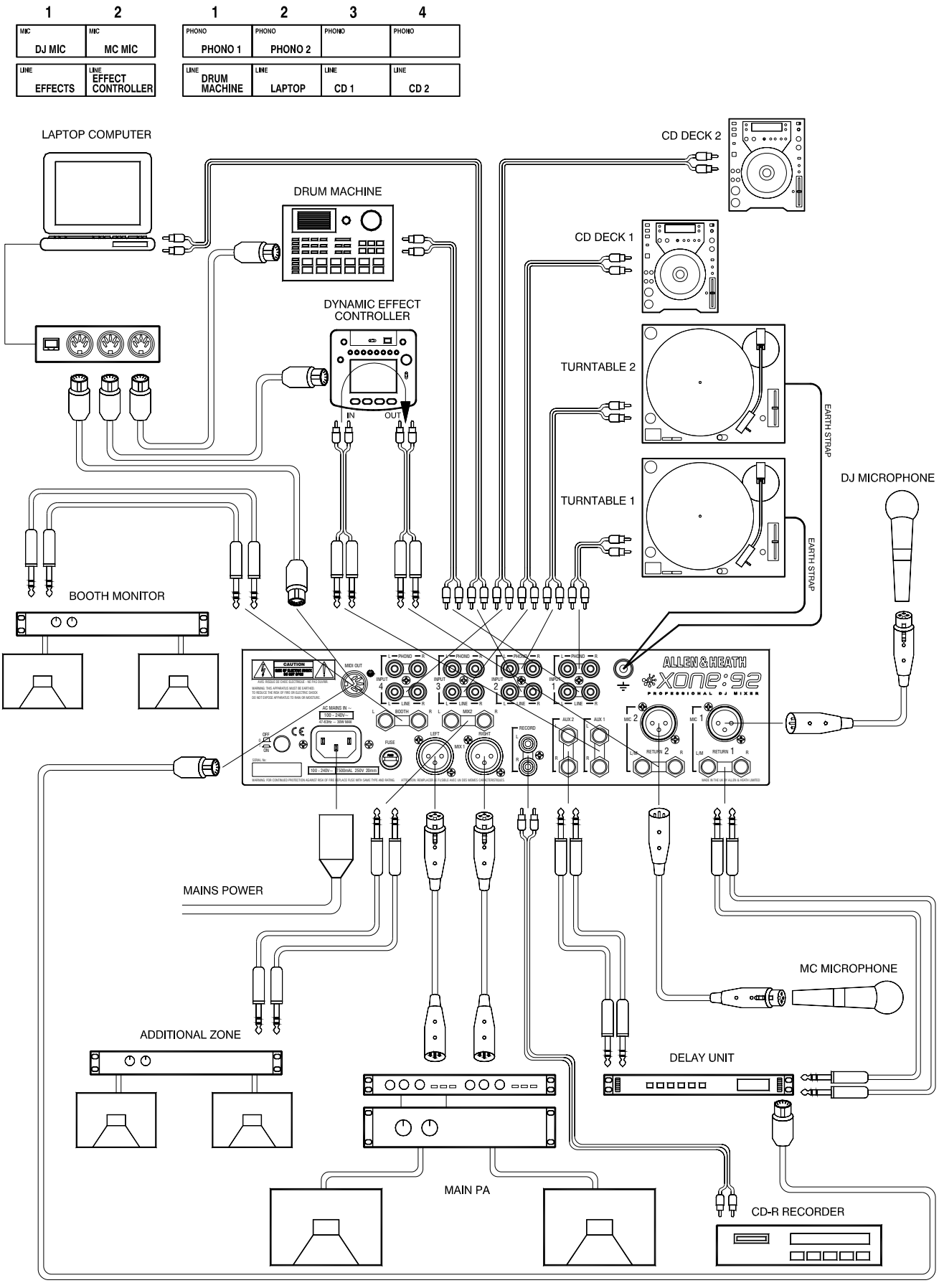
1
2
MIC
DJ MIC
MIC
MC MIC
LINE
EFFECTS
LINE
EFFECT CONTROLLER
1
2
3
4
PHONO
PHONO 1
PHONO
PHONO 2
PHONO
PHONO
LINE
DRUM MACHINE
LINE
LAPTOP
LINE
CD 1
LINE
CD 2
LAPTOP COMPUTER
CD DECK 2
DRUM MACHINE
CD DECK 1
DYNAMIC EFFECT CONTROLLER
IN
OUT
TURNTABLE 2
EARTH STRAP
DJ MICROPHONE
TURNTABLE 1
EARTH STRAP
BOOTH MONITOR
ALLEN & HEATH
XONE:92
PROFESSIONAL DJ MIXER
MAINS POWER
MC MICROPHONE
ADDITIONAL ZONE
DELAY UNIT
MAIN PA
CD-R RECORDER

The XONE:92 Application

This diagram shows an example hook-up to demonstrate how the **XONE:92** can be connected in a typical DJ application. Note that you do not need to connect the channels in the order shown, also that the connector types on the equipment you connect to may be different to that shown. Use cables appropriate to your application. Please read **Plugging Up The System** before connecting to your equipment. The following describes how the console is used in this example application:

Microphone sources: The DJ microphone is plugged into MIC 1. A second mic is plugged into MIC 2, typically for MC. These signals route to the mix outputs and headphones. They are not routed through the crossfader, nor to the booth monitor, so avoiding potential acoustic feedback.

Mix music sources: Stereo channels 1 and 2 are used for turntables. Stereo channels 3 and 4 line are used for CD decks. The turntable magnetic cartridges plug into the RIAA equipped phono inputs, the CD into the line inputs. This gives the DJ the choice of both vinyl and CD.

Drum machine: It is increasingly popular for the DJ to cut in additional sources over the mix. A drum machine provides a creative instrument, ideal for enhancing the beat and bass line. This is shown plugged into stereo channel 1 line input. It can be assigned to either side of the crossfader or direct to the mix as required. The MIDI out from the XONE:92 provides the master MIDI clock to allow synchronisation to the pre recorded sources and enables remote Start/Stop of this device.

Dynamic Effects Controller/ Delay Unit: The stereo Aux 1 & 2 sends are used to feed selected channels to external effects units, such as a DJ effects and Delay units. They are typically set pre-fader so that the effects can be set up while the channel faders are down. The devices outputs are returned into stereo return line inputs and can be added to the mix using the return faders. MIDI control of both of these devices is possible from the XONE:92 depending on MIDI controller compatibility. Refer to each devices user guide for details of its MIDI setup. The stereo return On switches can be used to drop an effect or delay into the mix by pushing the On switches up to the DUCK position; this will bring the effect into the mix and automatically lower the level of the source by 15dB.

Laptop PC: Increasingly computer based sequencing is being used during a live set, running dedicated sequencing software. The MIDI out from the XONE:92 is used to provide master tempo and remote control of certain parameters within the software by mapping it to the controller codes generated by the mixer.

Mix 1 outputs: These outputs feed the main house PA system. The connections are balanced pro level +4dBu to feed long cable runs to the amplifier system. They may plug into system processors such as protection limiters, EQ and crossovers which in turn connect to the amplifiers.

Mix 2 outputs: These outputs feed an external amplifier providing sound to an additional zone. They may plug into external signal processors or even be used as additional auxiliary outputs.

MIDI output: Featured front panel controls output MIDI data to an external device such as a computer sequencer or effects controller. This capability enables the DJ to additionally control MIDI compatible equipment during the performance.

Recording the set: A dedicated music only stereo output connects to a recorder such as the CDR shown to record the performance. Typically the mic signals are not recorded. The signal is not affected by the master mix controls.

Booth monitor: A stereo speaker system provides the DJ with a music only local monitor. This can be checked or worked in mono if required, or muted if the DJ wishes to check the main PA sound or work with headphones only.

Headphones: Closed ear stereo headphones are recommended allowing the DJ to check and cue the music sources. Split-cue keeps the program in one ear while cueing with the other to synchronise the beat before introducing the source into the mix. Two front panel connections; 1/4" jack and a standard mini-jack headphone socket are provided for your convenience.

Quick Start ⏭

We recommend that you read through all sections of this User Guide before starting. However, we provide these notes so that you can plug up and experiment with sounds from your **XONE:92** immediately if you prefer to read the full guide later. Please note that you should first read and understand the **Important Safety Instructions** printed at the beginning of this guide. The following simple procedure requires a CD player and headphones. Alternatively you can connect a pair of turntables and start mixing right away. Please read the rest of this guide before connecting to your amplifier and speaker systems.

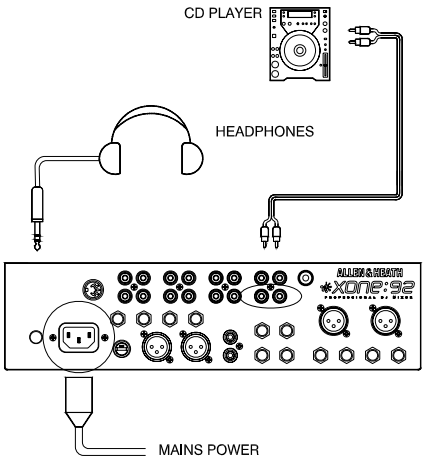

1 **Set all controls to their starting condition**. Set all FADERS (rotary and linear), LEVEL, AUX, FREQ, RESONANCE, LFO DEPTH, HEADPHONES and BOOTH MONITOR controls to minimum. Set EQ controls to their detented centre position. Set all press switches to their up position. Set all toggle switches to their centre position.

2 **Plug in a CD player**. This provides a good stereo audio source as a starting point. Plug into stereo channel 1 line input as shown. Do not use the phono input for CD or other line level sources as this is intended for turntables with magnetic cartridges requiring RIAA equalisation.

3 **Plug in the headphones**. Plug into either of the top panel headphones sockets. Use the best headphones you can afford for your application. We recommend the professional grade closed-ear type of 30 to 100ohms impedance, and with ¼" TRS jack plug.

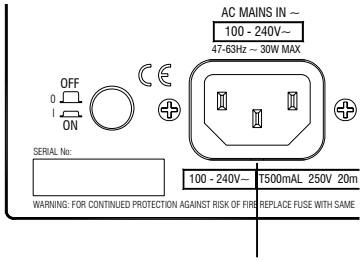

4 **Connect AC mains power**. Check first that the correct mains lead with sealed plug suitable for your local supply has been provided with your console. Plug into the AC MAINS IN socket making sure the connector is pressed fully in.

5 **Switch the console on**. Press the rear panel ON/OFF switch. You may notice that the console meters and various other LEDs flash briefly. This is normal during power up.

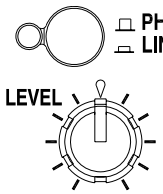

6 **Select the line source**. Press the stereo channel 1 source select switch. This lights red to indicate that the line source is selected.

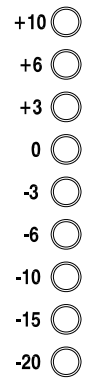

7 **Adjust the channel level**. Start the CD player. Adjust stereo channel 1 LEVEL control until the average music level lights the channel meter blue 0 led with loudest peaks lighting the blue +6 led. If no signal is present check that the music source is playing and the correct input is selected.

⚠ **Reduce LEVEL if the red +10 Led lights. This indicator is a warning that the signal is approaching clipping and that distortion may result if the level increases further.**

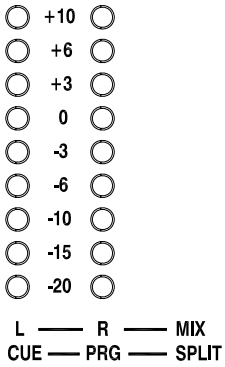

8 **Check the sound using the Cue system**. With the music playing press the large CUE switch. The switch lights as well as the CUE ACTIVE led to show that the cue monitor is active. The channel signal is now sent to the headphones. Slowly turn up the headphones level control until you hear the music.

Avoid listening to loud headphones levels for long periods as this may damage your hearing.

The channel signal is now displayed on the main monitor meters. Note that the cue system lets you monitor the channel signals pre-fader. In other words you can check or cue any source before you raise its fader to bring it into the mix.

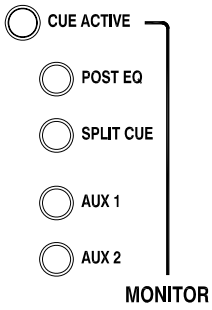

9 **Route the signal to the main Mix 1 output**. Release the CUE switch. The CUE light-pipe turns off and the headphones and monitor meters go quiet. Raise stereo channel 1 fader to its top position. With the XFADE toggle switch in its central position 'OFF' the signal is routed direct to the mix. The signal is now displayed on the main meters at the same level as the channel meter. The level is now the same throughout the console signal path, as set by the channel gain control. This is the ideal setting with meters averaging 0dB so giving the best signal-to-noise performance while maintaining plenty of headroom to avoid clipping.

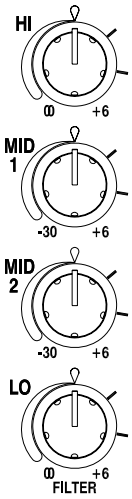

10 **Listen to the main MIX 1 output**. The music should be heard in the headphones. If not, then check that the AUX 1 and AUX 2 switches are released and that no CUE switches are selected.

11 **Check the effect of the Stereo EQ**. Try the effect of each of the 4 frequency bands on stereo channel 1. The EQ is designed for creative live performance control and provides a safe +6dB boost, and cut from a massive –30dB to infinity. Experiment with cutting rather than boosting frequencies to create dramatic effects.

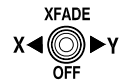

12 **Route through the Crossfader**. Using the XFADE toggle switch, select X to route the signal through the crossfader rather than direct to the mix. The green 1 led lights indicating that stereo channel 1 is assigned to the crossfader.

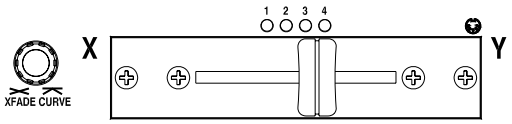

13 **Using the Crossfader**. This lets you fade between signals routed to either side, typically to fade smoothly into a new music track or to creatively layer sounds when scratch or cut mixing. Experiment further by connecting two CD decks or turntables and assigning one to X, the other to Y. The channel(s) assigned to the crossfader are indicated by the green leds above.

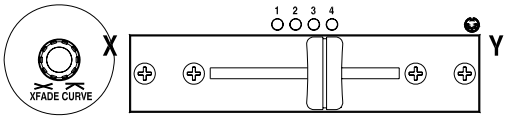

14 **Changing the crossfader curve**. The control knob to the left of the crossfader sets the crossfader curve. In the normal fully anticlockwise position the signal dips by 5dB at the middle position for smooth fading between tracks. Turn the knob clockwise gradually for an increasingly dipless response; whereby the signal starts to dip only once the fader has passed the mid position. This is better suited to scratch or cut mixing where you layer the sounds.

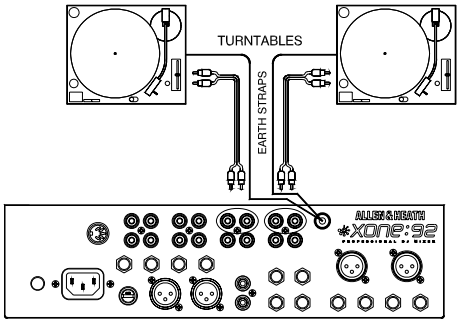

15 **Crossfader mixing**. At this point you may wish to plug in a pair of turntables and experiment with DJ mixing. Plug into stereo channel 1 and channel 2 phono inputs if your turntables require RIAA equalisation. If not, plug into the line inputs. Remember to connect the turntable earth leads to the console chassis earth terminal. Use CUE to set up the channel level as you did in step 7. Route channel 1 to X and channel 2 to Y of the crossfader.

16 **Adding VCF filter effects**. Each side of the crossfader features a stereo Voltage Controlled Filter which presents the DJ with a unique set of live performance tools to create subtle or startling tonal effects. Route the channel to either of the two filters using the three way toggles; push the toggle to the left for filter 1 and to the right for filter 2. Activate the filter by pressing the FILTER ON switch. The blue led light-pipe lights to show that the filter is active. Check that the large LPF switch is illuminated indicating that the power up default lo-pass filter type is active. The sound should change to a rumbling bass line with higher frequencies removed.

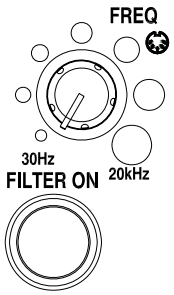

17 **Sweep the filter frequency**. Turn the FREQ control clockwise and you should progressively hear higher audio frequencies returning to the mix. This control sweeps the effect from low to high frequency.

18 **Adjust the filter resonance**. Slowly turn the RESONANCE control clockwise as you sweep the frequency and you should hear the 'Q' or 'sharpness' of the effect changing from subtle to drastic as the roll-off knee sharpens and frequency boost is added.

Increasing resonance boosts a narrow band of selected frequencies. Make sure you reduce the channel gain if the red peak meters start to flash.

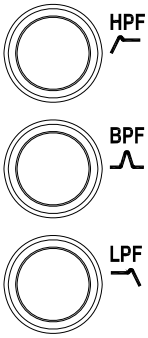

19 **Change the filter type**. Press one or any combination of the large HPF, BPF and LPF filter type switches to experiment with different performance effects. For example pressing HPF and LPF together produces a notch effect. Once you are familiar with the creative power of these filters you can apply them to your performance. More information is available later.

Now…continue to read through the rest of this User Guide.

Gain and Operating Levels

It is most important that the system level settings are correctly set. It is well known that many DJs push the level to maximum with meters peaking hard in the belief that they are getting the best from the system. **THIS IS NOT THE CASE !** The best can only be achieved if the system levels are set within the normal operating range and not allowed to peak. Peaking simply results in signal distortion, not more volume. It is the specification of the amplifier / speaker system that sets the maximum volume that can be achieved, not the console. The human ear too can fool the operator into believing that more volume is needed. Be careful as this is in fact a warning that hearing damage will result if high listening levels are maintained. Remember that it is the QUALITY of the sound that pleases the ear, not the VOLUME.

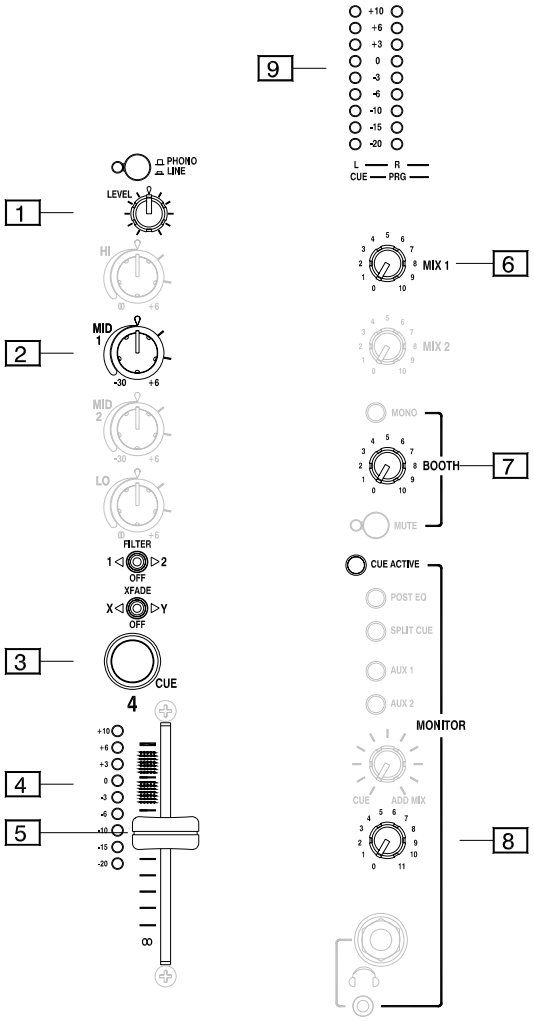

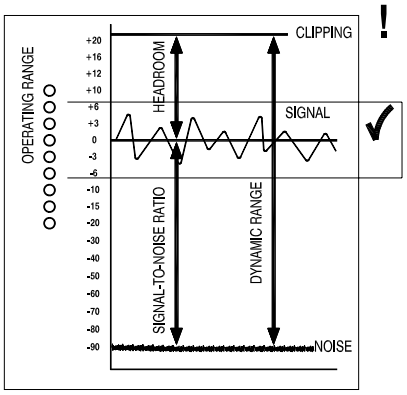

The diagram above illustrates the operating range of the audio signal.

NORMAL OPERATING RANGE. For normal music the signal should range between –5 and +5 on the meters with average around 0dB. This allows enough **HEADROOM** for unexpected peaks before the signal hits its maximum **CLIPPING** voltage and distorts. It also achieves the best **SIGNAL-TO-NOISE-RATIO** by keeping the signal well above the residual **NOISE FLOOR** (system hiss). The **DYNAMIC RANGE** is the maximum signal swing available between the residual noise floor and clipping. The **XONE:92** provides a massive 110dB dynamic range.

Use the **LEVEL TRIM** 1 to match the input source to the normal operating level of the console. Adjust this so that the **CHANNEL METER** 4 averages 0dB with loudest moments reading +6. Press the **CUE SWITCH** 3 to listen to the signal on headphones and check the level on the **MAIN METERS** 9. Adjust the **CHANNEL FADER** 5 so that they normally operate near the top of their travel. Make sure the amplifier/speaker system has been correctly calibrated for the loudest volume required at the fader top position. Boosting the **EQ** 2 also adds gain to the system. Reduce by turning back the **LEVEL TRIM** 1 if the meter red peak leds flash. Adjust the **HEADPHONES** 8 and **BOOTH** 7 monitor controls for safe listening levels.

A final note … The human ear is a remarkable organ with the ability to compress or 'shut down' when sound levels become too high. Do not interprete this natural response as a reason to turn the system volume up further ! As the session wears on ear fatigue may set in, and the speaker cones may become hot so reducing the effectiveness of the system and listeners to gain any benefit from increased volume.

BE SENSIBLE, BE SAFE WITH SOUND LEVELS

Connecting Mains Power

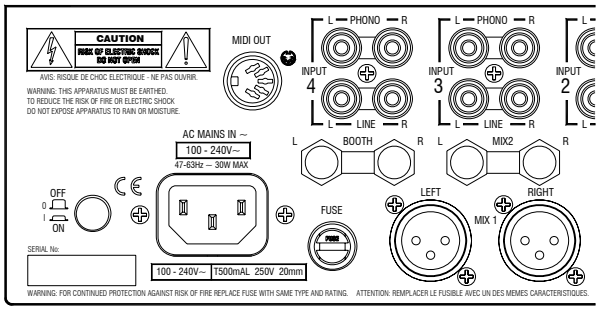

Read the **SAFETY INSTRUCTIONS** printed at the front of this User Guide and on the rear panel. Check that the correct mains lead with moulded plug has been supplied with your console. The power supply accepts mains voltages within the range 100-240V without changing any fuses or settings.

It is standard practice to turn connected power amplifiers down or off before switching the console on or off. This prevents any audible switch-on thumps. Ensure that the IEC mains plug is pressed fully into the rear panel socket before switching on.

Earthing

The connection to earth (ground) in an audio system is important for two reasons:

1. **SAFETY** - To protect the operator from high voltage electric shock, and
2. **AUDIO PERFORMANCE** - To minimise the effect of earth (ground) loops which result in audible hum and buzz, and to shield the audio signals from interference.

For safety it is important that all equipment earths are connected to mains earth so that exposed metal parts are prevented from carrying high voltage which can injure or even kill the operator. It is recommended that the system engineer check the continuity of the safety earth from all points in the system including microphone bodies, turntable chassis, equipment cases, and so on.

The same earth is also used to shield audio cables from external interference such as the hum fields associated with power transformers, lighting dimmer buzz, and computer radiation. Problems arise when the signal sees more than one path to mains earth. An 'earth loop' (ground loop) results causing current to flow between the different earth paths. This condition is usually detected as a mains frequency audible hum or buzz.

To ensure safe and trouble-free operation we recommend the following:

- **Have your mains system checked by a qualified electrician.** If the supply earthing is solid to start with you are less likely to experience problems.
- **Do not remove the earth connection from the console mains plug.** The console chassis is connected to mains earth through the power cable to ensure your safety. Audio 0V is connected to the console chassis internally. If problems are encountered with earth loops operate the audio 'ground lift' switches on connected equipment accordingly, or disconnect the cable screens at one end, usually at the destination.
- **Make sure that turntables are correctly earthed.** A chassis earth terminal is provided on the console rear panel to connect to turntable earth straps.
- **Use low impedance sources** such as microphones and line level equipment rated at 200 ohms or less to reduce susceptibility to interference. The console outputs are designed to operate at very low impedance to minimise interference problems.
- **Use balanced connections for microphones and mix output** as these provide further immunity by cancelling out interference that may be picked up on long cable runs. To connect an unbalanced source to a balanced console input, link the cold input (XLR pin 3 or jack ring) to 0V earth (XLR pin 1 or jack sleeve) at the console. To connect a balanced XLR output to unbalanced equipment, link the cold output to 0V earth at the console.
- **Use good quality cables and connectors** and check for correct wiring and reliable solder joints. Allow sufficient cable loop to prevent damage through stretching.
- **If you are not sure ...** Contact your service agent or local Allen & Heath dealer for advice.

Plugging Up The System

The **XONE:92** uses professional grade 3 pin XLR, 1/4" TRS jack and RCA PHONO sockets. To ensure best performance, we recommend that you use high quality audio cables and connectors, and take time to check for reliable and accurate cable assembly. It is well known that many audio system failures are due to faulty interconnecting leads. The following mating plugs may be used to connect audio signals to the console:

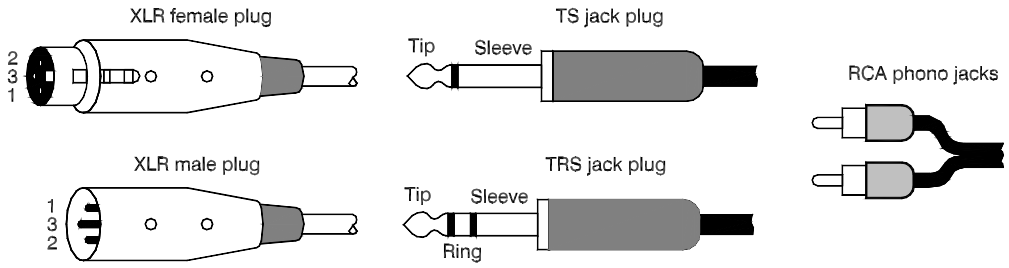

The input and output **XLR** connectors are 3 wire differentially balanced. These have 3 connector pins: Pin 1 = ground (screen), Pin 2 = signal hot (+), Pin 3 = signal cold (-).

The jack sockets are the 3 pole **TRS** type. These are wired to work with both the balanced TRS or the unbalanced 2 pole TS type plugs without cable modification. The sockets have 3 connector pins: Inputs and outputs are Tip = signal hot (+), Ring = signal cold (-), Sleeve = ground (screen). Headphones are Tip = left, Ring = right, Sleeve = ground.

The **RCA** phono connectors are the 2 wire unbalanced type typical of those found on equipment such as CD players, turntables and domestic amplifiers.

Avoid reversing + and - on balanced connections as this will result in out of phase signals (reverse polarity) which may cause signal cancellation effects.

Where long cables runs are required, balanced interconnections should be used. However, interconnections between more affordable 2-wire (signal, ground) unbalanced equipment and the console are unlikely to cause problems if the cables are kept short. Refer to the following diagram for unbalanced to balanced connections.

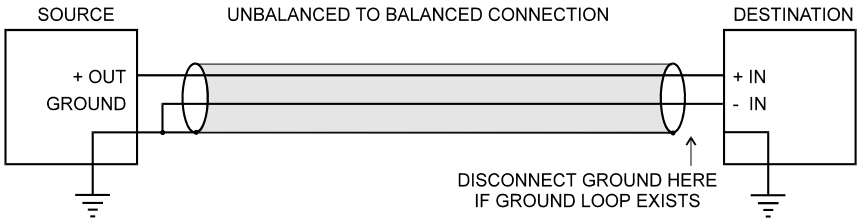

Dealing with Ground Loops, Buzz and Interference

For optimum performance all audio signals should be referenced to a solid, noise-free ground (earth) point, frequently referred to as the ‘star point’ or ‘clean earth’.

A ground loop is created when the signal has more than one path to ground. Should you experience hum or buzz caused by ground loops, check first that each piece of equipment has its own separate path to ground. If so, operate ground lift switches on connected equipment in accordance with the instruction manuals. Alternatively disconnect the cable screen at the destination end only. This breaks the offending loop while still maintaining the signal shielding down the length of the cable.

⚠ WARNING For your safety do not remove the earth (ground) connection in the power lead of the console or connected equipment.

To avoid interference pickup keep audio cables away from mains power units and cables, thyristor dimmer units or computer equipment. Where this cannot be avoided, cross the cables at right angles to minimise interference.

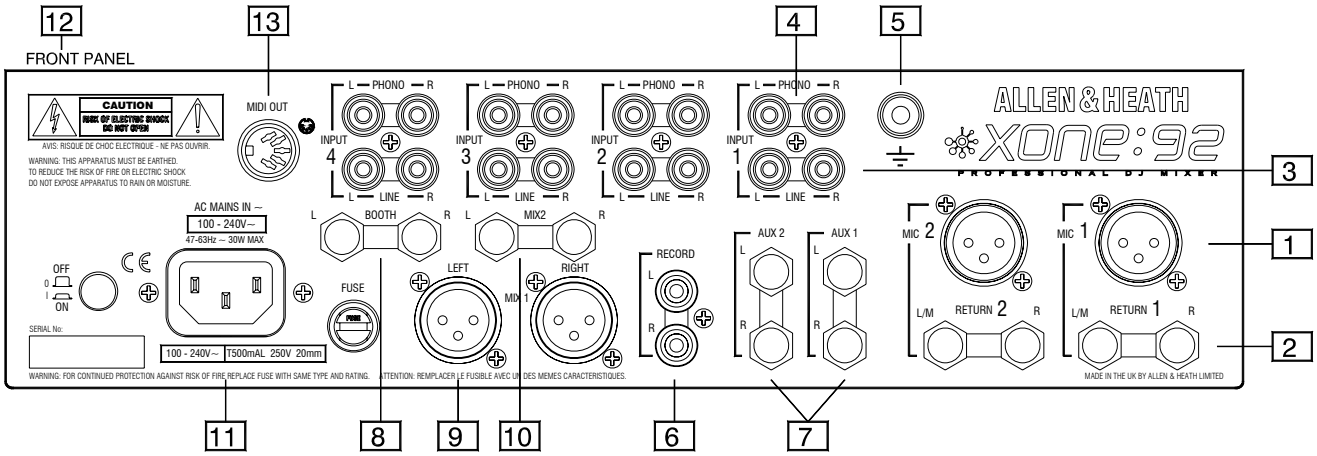
12
FRONT PANEL
13
4
5
MIDI OUT
CAUTION
RISK OF ELECTRIC SHOCK DO NOT OPEN
AVIS: RISQUE DE CHOC ELECTRIQUE - NE PAS OUVRIR.
WARNING: THIS APPARATUS MUST BE EARTHED.
TO REDUCE THE RISK OF FIRE OR ELECTRIC SHOCK
DO NOT EXPOSE APPARATUS TO RAIN OR MOISTURE.
L PHONO R
INPUT 4
INPUT 3
INPUT 2
INPUT 1
L LINE R
ALLEN & HEATH
XONE:92
PROFESSIONAL DJ MIXER
3
AC MAINS IN ~
100 - 240V~
47-63Hz ~ 30W MAX
OFF
ON
SERIAL No:
FUSE
100 - 240V~ T500mAL 250V 20mm
BOOTH
MIX2
LEFT
RIGHT
MIX 1
RECORD
AUX 2
AUX 1
MIC 2
MIC 1
L/M
RETURN 2
RETURN 1
1
2
WARNING: FOR CONTINUED PROTECTION AGAINST RISK OF FIRE REPLACE FUSE WITH SAME TYPE AND RATING.
ATTENTION: REMPLACER LE FUSIBLE AVEC UN DES MEMES CARACTERISTIQUES.
MADE IN THE UK BY ALLEN & HEATH LIMITED
11
8
9
10
6
7

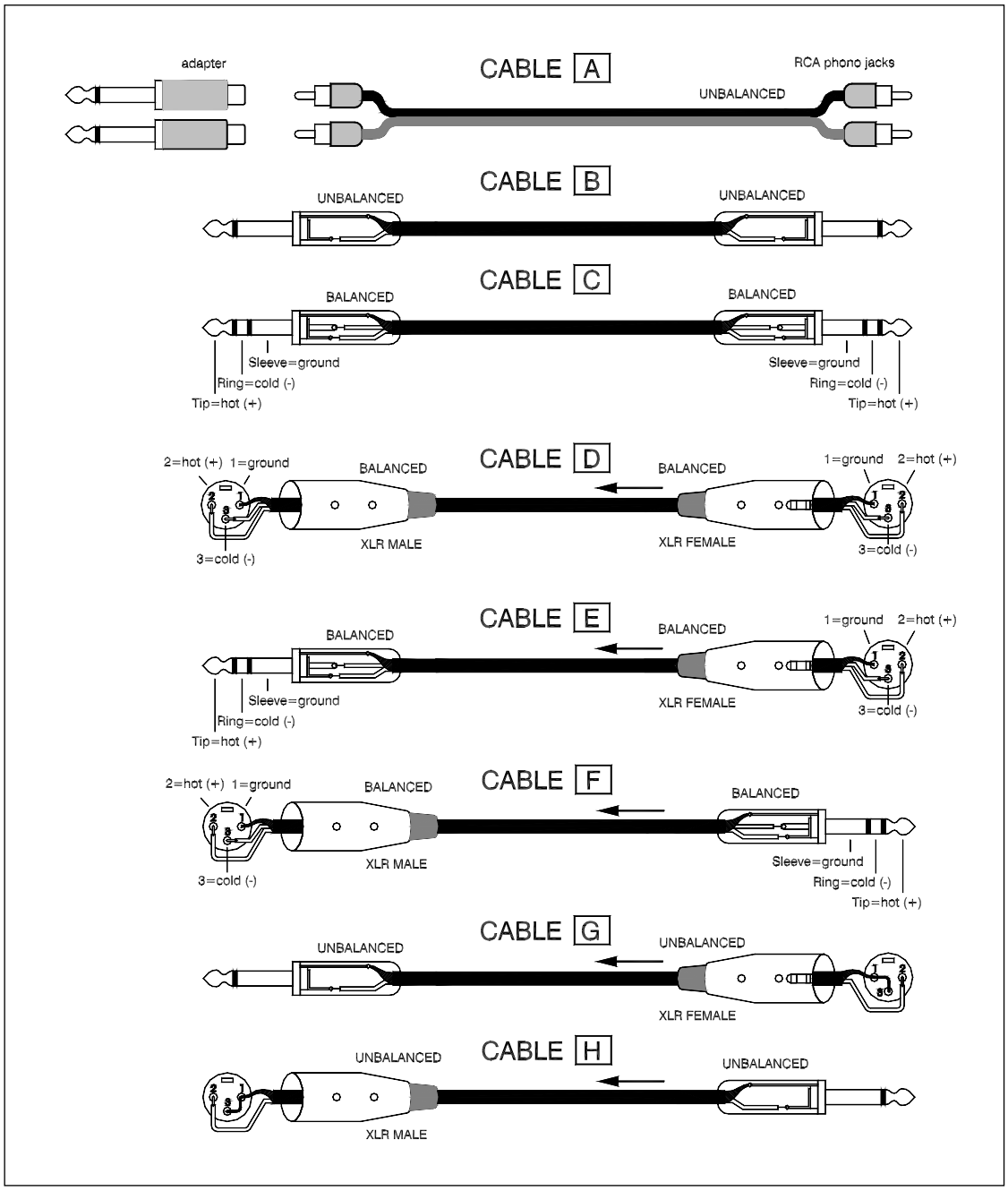
adapter
CABLE A
RCA phono jacks
UNBALANCED
CABLE B
UNBALANCED
UNBALANCED
CABLE C
BALANCED
BALANCED
Sleeve=ground
Ring=cold (-)
Tip=hot (+)
Sleeve=ground
Ring=cold (-)
Tip=hot (+)
CABLE D
2=hot (+) 1=ground
BALANCED
BALANCED
1=ground 2=hot (+)
XLR MALE
XLR FEMALE
3=cold (-)
3=cold (-)
CABLE E
BALANCED
BALANCED
1=ground 2=hot (+)
Sleeve=ground
Ring=cold (-)
Tip=hot (+)
XLR FEMALE
3=cold (-)
CABLE F
2=hot (+) 1=ground
BALANCED
BALANCED
XLR MALE
Sleeve=ground
Ring=cold (-)
Tip=hot (+)
3=cold (-)
CABLE G
UNBALANCED
UNBALANCED
XLR FEMALE
CABLE H
UNBALANCED
UNBALANCED
XLR MALE

1 **CH1-2 MIC input**. Balanced XLR. Plug in a DJ, guest or announcement microphone here. Use good quality low impedance dynamic mics such as those specifically designed for vocals. Do not use high impedance or unbalanced microphones, or condenser types which require phantom power. Use professional grade balanced cables wired as CABLE D. Use the best cable and connectors you can afford as these are typically subject to intense use and abuse in the club environment.

2 **CH1-2 LINE RETURN input**. Unbalanced TRS jacks. Connect mono or stereo line level sources which do not need to route through the crossfader. For a mono source plug into the L/M input only. For a stereo source plug the left source into the L/M input, and right into the R input. These are 3-pole TRS sockets which can accept balanced or unbalanced TRS or TS jack sources. Depending on the source connector type, use CABLE B C E or G. To connect RCA phono jack sources you can use the standard CABLE A with RCA to jack adapters, or custom make as required.

3 **CH1-4 STEREO LINE input**. RCA phono. Connect stereo line level music sources such as CD, MD, DAT, drum machines, keyboards or other instruments. Do not connect turntables which require RIAA equalisation. Use CABLE A. Alternatively, you can connect to jack sources using this cable with RCA to jack adapters. Avoid using low grade cables such as those often supplied with domestic equipment as these can quickly prove unreliable in use.

4 **CH1-4 STEREO PHONO input**. RCA phono. Plug in turntables with magnetic cartridges requiring RIAA equalisation. For non-RIAA turntables plug into the LINE input instead. Do not plug in line level sources to the phono inputs as these will overload the preamp and cause severe high level distortion. Use high grade versions of CABLE A.

5 **Chassis earth terminal**. A screw terminal is provided for connecting the earth straps from turntables. This connection earths the metal parts of the turntable to reduce hum, buzz or similar audible noise getting into the system.

6 **RECORD output**. RCA phono. This provides a music only output not affected by the main mix fader. Connect to a stereo recorder such as MD, DAT or cassette to record the show. Use CABLE A with or without adapters, or a custom cable, depending on the recorder connector type.

7 **AUX 1-2 output**. Impedance balanced TRS jacks. Depending on the application of the Aux mix these stereo line level outputs can be used to feed samplers and other effects units, an additional monitor, zone or recorder. Connect to balanced or unbalanced equipment using CABLE B C F or H. To connect RCA phono jack sources you can use the standard CABLE A with RCA to jack adapters, or custom make as required.

8 **BOOTH output**. Impedance balanced TRS jacks. Provides a line level music only stereo feed to the DJ local monitor amplifier system. It is not affected by the master fader or cue system. Connect to balanced or unbalanced equipment using CABLE B C F or H.

9 **MIX 1 output**. Balanced XLR. This is the main output that feeds the house PA system. Plug into the house processor/amplifier system using balanced CABLE D or E. It is not usual for unbalanced equipment to be used here.

10 **MIX 2 output**. Impedance balanced TRS jacks. This is an additional output that can feed the house PA system or other remote audio system. Plug into the house processor/amplifier system using balanced CABLE C or F. It is not usual for unbalanced equipment to be used here.

11 **AC MAINS input**. IEC cable with moulded mains plug suitable for the local supply. Please refer to **Connecting Mains Power**.

12 **HEADPHONES outputs**. Stereo TRS jack and mini-jack. Plug in stereo headphones fitted with either a stereo ¼" jack or mini-jack. Use closed-ear headphones that provide maximum acoustic isolation when cueing your sources. We recommend that you use high quality headphones rated between 30 to 100 ohms impedance. 8 ohm headphones are not recommended.

13 **MIDI output**. 5 pin DIN socket. Connect to either a MIDI interface or directly to MIDI compatible equipment using a standard 5 pin DIN (MIDI) lead.

WARNING To avoid damage to your hearing do not drive headphones at high listening levels for long periods of time. Start with the level control set to minimum and raise it until a comfortable listening level is achieved.

MIC/RETURN Input Channel

These controls adjust the level and tone of each source before they are mixed. Two input channels are provided. Each has two inputs. MIC/RETURN channels 1 and 2 are used for microphone or alternative stereo line source. They provide corrective source equalisation.

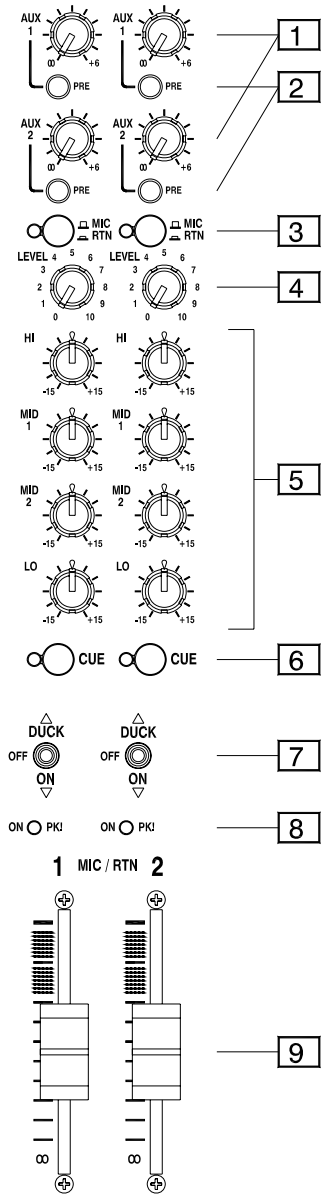

1 **AUX 1-2 sends**. Adjust the levels of the channel signals to the stereo Aux outputs. Turn fully anticlockwise to turn the signal off, fully clockwise for a maximum +6dB boost.

2 **PRE switches**. With the switch in its up position the signal to the Aux mix is sourced post-fader. This means that the Aux send follows the channel fader movements. Press the switch to source the send pre-fader. Set in this way the fader has no affect on the Aux level.

Post-fade sends are typically used to send channel signals to effects devices such as reverb processors. The amount of signal sent to the device follows the fader level. The processed (wet) signal returned to the mix elsewhere is therefore in proportion to the direct (dry) signal regardless of fader position. This could, for example, be used to add ambience to the DJ or guest vocal mic.

Other post-fade uses include special recording or zone feeds.

Pre-fade sends are typically used for DJ effects or to feed monitor speakers such as stage foldback. Here, it is important that fader changes made to balance the house mix do not affect the monitor levels.

When working with a sampler effects device you could use either post or pre setting. If you wish to cue the sampler effect before raising the source fader into the mix then set it pre-fade. Use the sampler return channel fader to bring up or remove the effect from the mix.

☺ You can use the Aux mix to cue your music when beat or cut mixing. Set all sends pre-fade and select the headphones monitor AUX switch to listen to the selected channels. This lets you listen to the effect of mixing the sources or matching the beat before you bring it into the house mix.

3 **MIC/RTN switch**. MIC/RETURN Channels 1 and 2 are the 'MIC' channels. They can select either the XLR microphone input or the alternative jack stereo line return input. In the up position MIC is selected, indicated by the green led. When pressed, RTN is selected, indicated by the led changing colour to red.

4 **LEVEL control**. Adjusts the input sensitivity of the channel to match the connected source to the console 0dB operating level. This provides a 35-37dB range with continuous adjustment for line level signals from –15dBu to +20dBu, –47dBu to –10dBu for mics, or to match a wide range of RIAA turntable cartridges. Use the Cue system to correctly set the level.

Reduce LEVEL if the red PK! led flashes.

5 **MIC EQ**. The MIC/RETURN channel 1 and 2 equaliser provides a powerful tool to adjust the tonal quality of the sound to correct source problems such as microphone characteristics, proximity effect, noise and feedback, or to adjust the overall 'feel'. Start with the EQ controls set to their mid (flat) position. Then adjust to achieve the desired sound. Take time to experiment with these controls.

The **XONE:92** equaliser provides separate tone control over four frequency bands. The frequencies in each band may be boosted or cut by up to 15dB. The centre flat position is detented for quick resetting.

HI Turn this control clockwise to boost and anticlockwise to cut the high (treble) frequencies. This has a shelving response with all frequencies above the 10kHz turning point affected. Note that frequencies below 10kHz are affected by a decreasing amount. Use HI boost to brighten up the sound by adding sparkle, and cut to reduce source hiss and ambient high frequency pickup, or to limit or lift the high response of vocal mics.

MID 1 Turn clockwise to boost and anticlockwise to cut the higher mid frequencies. This has a bell shaped peak/dip response that has maximum effect at 2.5kHz. Boosting can enhance the intelligibility of vocals. On the other hand, some situations may require cutting to notch out a ringing frequency so increasing gain before feedback.

MID 2 This is similar to MID 1 but affects the lower mid frequencies centred at 250Hz. Boosting can enhance the warmth of the sound while cutting can reduce the unpleasant resonant or boomy effects.

LO This is similar to the shelving HI control but affects the low (bass) frequencies below the 100Hz turning point. Note that frequencies above 100Hz are affected but by a decreasing amount. Use LO boost to enhance low end punch, or cut to reduce source hum and rumble, or to remove the bassy sound of vocal mic proximity effect.

6 **CUE switch**. Press this switch to listen to the pre-fader channel signal in the headphones and to display its signal on the main meters. This does not affect the house mix or booth speakers and lets you audition the signal to check it before adding it to the mix. Cue is post-EQ for MIC/RTN channels so that you can check the effect of adjusting the EQ. The switch illuminates when pressed so that you can see at a glance which channel is cued.

7 **DUCK / ON switch**. For MIC/RETURN channels 1 and 2 use this to introduce the MIC/RTN signal to the mix outputs. Pushing the switch upwards (non-latching) 'DUCK' will add the channel input to the mix outputs until released and will simultaneously duck the stereo music channels by 15dB. Pushing the switch down (latching) 'ON' adds the channel input to the mix outputs without ducking the stereo channels. The central, default position is 'OFF' where the Mic channel inputs are not added to the mix outputs.

8 **ON / PK! LED**. A dual-colour led simultaneously displays which MIC/RTN channel is switched ON, and warns of channel signal peaks. The led lights green to indicate that a channel is turned ON. Reduce the gain if the led PK! flashes red.

9 **Channel fader**. A 60mm stereo fader adjusts the signal level from off to unity at the top of its travel. This allows smooth fade ins and a visual indication of its contribution to the mix. The fader does not affect the pre-fade Aux sends.

PHONO/LINE Input Channel

These controls adjust the level and tone of each source before they are mixed. Four STEREO music channels are provided. Each has two inputs. STEREO LINE inputs 1 to 4 are used for CD decks or alternative stereo music sources and can be routed through the crossfader and Filter effects stage. STEREO PHONO inputs 1 to 4 are used for the turntables and can also be routed through the crossfader and Filter effects stage. These provide effective equalisation to creatively shape the sound during performance.

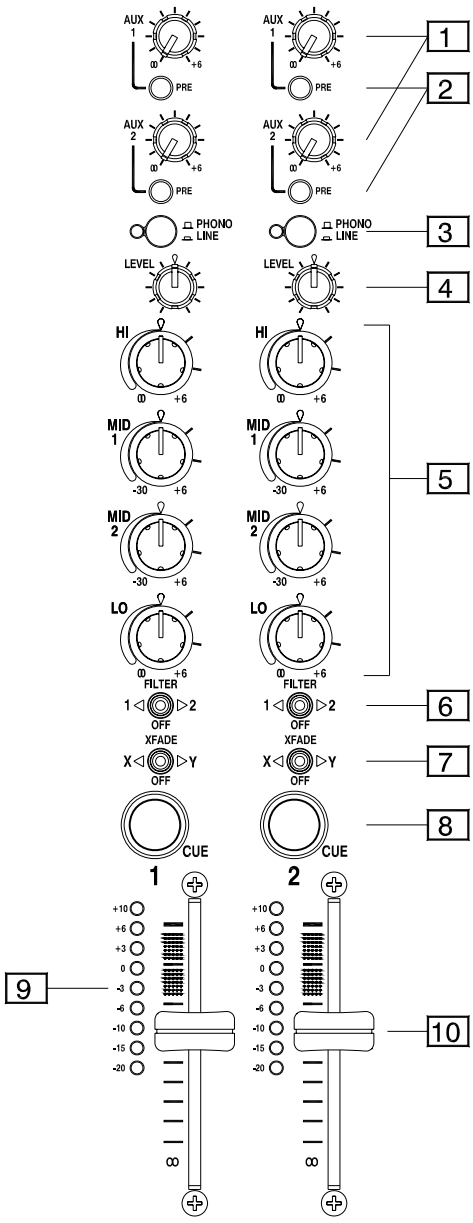

1 **AUX 1-2 sends**. Adjust the levels of the channel signals to the stereo Aux outputs. Turn fully anticlockwise to turn the signal off, fully clockwise for a maximum +6dB boost.

2 **PRE switches**. With the switch in its up position the signal to the Aux mix is sourced post-fader. This means that the Aux send follows the channel fader and crossfader movements. Press the switch to source the send pre-fader. Set in this way the fader has no affect on the Aux level.

Post-fade sends are typically used to send channel signals to effects devices such as reverb or delay processors. The amount of signal sent to the device follows the fader level. The processed (wet) signal returned to the mix elsewhere is therefore in proportion to the direct (dry) signal regardless of fader position.

Other post-fade uses include special recording or zone feeds.

Pre-fade sends are typically used for DJ effects or to feed monitor speakers such as stage foldback. Here, it is important that fader changes made to balance the house mix do not affect the monitor levels.

When working with a sampler effects device you could use either post or pre setting. If you wish to cue the sampler effect before raising the source fader into the mix then set it pre-fade. Use the sampler return channel fader to bring up or remove the effect from the mix.

☺ You can use the Aux mix to cue your music when beat or cut mixing. Set all sends pre-fade and select the headphones monitor AUX switch to listen to the selected channels. This lets you listen to the effect of mixing the sources or matching the beat before you bring it into the house mix.

3 **PHONO/LINE switch**. Channels 1 to 4 are the stereo 'MUSIC' channels. In the up position the switch selects the PHONO input, indicated by the green led. This input provides standard RIAA equalisation for high quality magnetic cartridge turntables. When pressed, LINE is selected, indicated by the led changing colour to red. Use this to select non-RIAA or alternative stereo music sources.

4 **LEVEL control**. Adjusts the input sensitivity of the channel to match the connected source to the console 0dB operating level. This provides a 20dB range with continuous adjustment for line level signals from –10dBu to +10dBu. Use the Cue system to correctly set the level.

Reduce LEVEL if the red +10 led flashes.

5 **MUSIC EQ**. Stereo Channels 1 to 4 feature a unique four band equaliser providing infinite attenuation of high and low frequencies and -30dB attenuation of mid frequencies. This provides the DJ with effective equalisation to creatively alter and shape the sound during live performance rather than simply correct source problems. This type of equaliser is known as 'asymmetric' because the amount of boost and cut is not the same. Boost is restricted to a safe +6dB to highlight selected sounds while preventing system overload through heavy use. Cut on the other hand, is used to completely suck out affected frequencies allowing two or more tracks to be mixed together without vocals or bass lines clashing.

HI Turn this control clockwise to boost and anticlockwise to cut the high (treble) frequencies. This has a shelving response when turned clockwise with all frequencies above the 2.5kHz turning point affected. When turned fully anticlockwise the response changes to a low pass filter (12dB/Oct) with all frequencies above the cut-off point being progressively attenuated. Use HI boost to brighten up the sound by adding sparkle, and cut to eliminate all HF content.

MID 1 Turn clockwise to boost and anticlockwise to cut the higher mid frequencies. This has a bell shaped peak/dip response that has maximum effect at 2kHz. Frequencies in this range can be boosted by 6dB or attenuated by 30dB. The "Q" or frequency bandwidth also alters from a high Q (narrow bandwidth) on boost to a low Q wide bandwidth when cutting. This prevents accumulated gain when all EQ controls are fully clockwise.

MID 2 This is similar to MID 1 but affects the lower mid frequencies centred at 350Hz. Boosting can enhance the warmth of the sound while cutting can reduce the unpleasant resonant or boomy effects.

LO This is similar to the HI control but affects the low (bass) frequencies below the 250Hz turning point. . When turned fully anticlockwise the response changes to a high pass filter (12dB/Oct) with all frequencies below the cut-off point being progressively attenuated. Use LO boost to accentuate the bass lines/beats, and cut to eliminate all LF content.

6 **FILTER assign switch**. Toggle this switch to route the channel signal through either of the two VCF FILTER sections. Selecting the switch in the central 'OFF' position bypasses both the VCF FILTER sections. **Note:** Routing the channels to the filters with the filter ON can produce audible clicks; route the channels to either filter with the filter turned off to prevent this.

7 **XFADE assign switch**. Toggle this switch to route the channel signal to either side of the crossfader. Selecting the switch in the central 'OFF' position routes the signal direct to the mix outputs.

8 **CUE switch**. Press this switch to listen to the pre-fader channel signal in the headphones and to display its signal on the main meters. This does not affect the house mix or booth speakers and lets you audition the signal to cue a track before adding it to the mix. Cue is typically pre-EQ for music channels so that you do not lose your reference when beat mixing, regardless of the EQ effect, but can be selected to be post EQ by selecting the POST EQ switch in the master section. The CUE light-pipe illuminates so that you can see at a glance which channel is cued.

Selecting one cue will automatically cancel the previous cue. Multiple cues can be selected by pressing two or more together, but make sure all cues are OFF first.

9 **Channel meter**. A 9 led meter bar always shows the presence of the pre-fader channel signal. Adjust the LEVEL control for normal music averaging 0dB with loudest moments reaching +6. Reduce the level if the red +10 led flashes.

10 **Channel fader.** A 60mm linear or rotary stereo VCA fader adjusts the signal level from off to the normal top position. This allows smooth fade ins and a visual indication of its contribution to the mix. The fader does not affect the pre-fade Aux sends.

Crossfader and VCF

The crossfader is applied to the stereo music channels and lets you smoothly fade from one track into another using a single fader. It is also used as a creative performance tool to layer or interact between two sounds when cut or scratch mixing . It is fully assignable from each music channel and can be easily replaced if it becomes damaged or worn through exceptional mechanical operation. The high quality Penny & Giles type is used.

The **XONE:92** includes an enhanced version of the acclaimed analogue voltage controlled filter (VCF) section first introduced on the **XONE:62**. These filters provide live performance tools far more powerful than any equaliser or kill switch. They produce the same warm analogue resonant frequency sweeping sound as made popular by well known classic analogue synthesisers, but using the latest high performance technology for quiet, stable operation.

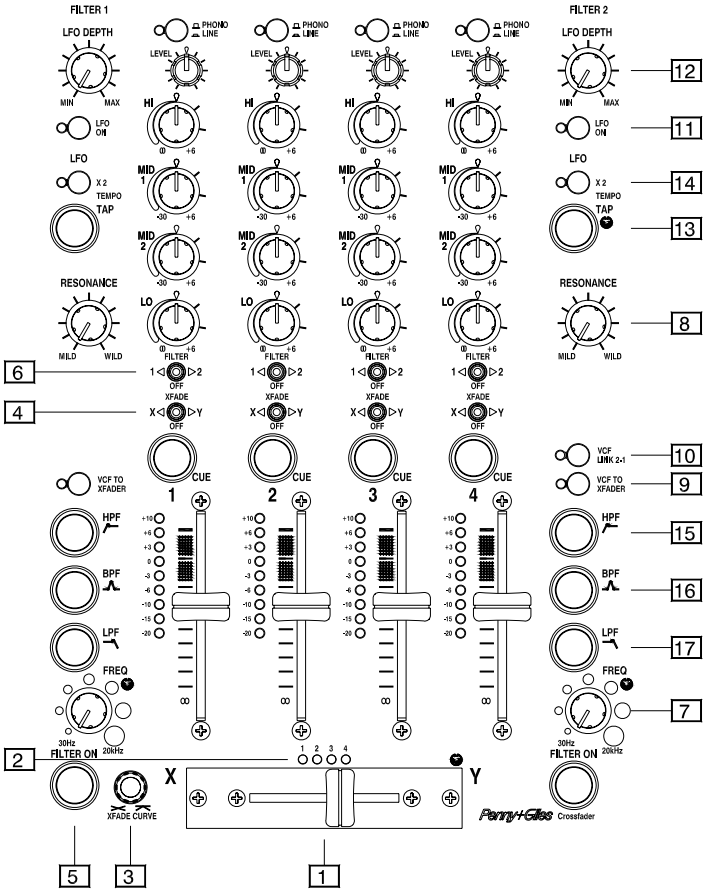

1 **VCA Crossfader**. The **XONE:92** uses eight high performance voltage controlled amplifiers (VCA), a pair for each music channel. The robust 45mm fader produces a DC control voltage which determines the signal level of the VCAs. The voltage is filtered to prevent any audible noise, clicks or scratchiness resulting should the fader track become worn. This benefit would not be possible if the signal were routed through a conventional audio fader.

2 **Crossfader assignment indicators**. Four green leds above the crossfader help you visually check which channels are routed to the crossfader.

3 **Crossfader Curve**. **XONE:92** allows the response of the crossfader to be altered to match all mixing styles. Turning the crossfade curve control fully anticlockwise gives a progressive curve with a dip (4dB) in the centre position. Rotating the control clockwise gradually reduces the centre dip and sharpens the attack. Fully clockwise the response is almost instantaneous and full signal level is reached as soon as the crossfader knob is moved from its end stop.

4 **XFADE select switch**. In the central position the music signal level is unaffected by the crossfader. Toggle to route the VCA control signal through the crossfader. To route to the left (X) side make sure the switch is in its left position. Switch to the right position to route to the right (Y) side. The relevant channel crossfader assignment indicator 2 will light.

Replacing the Crossfader

The crossfader on a DJ mixer is heavily used and can suffer considerable wear and tear. The audio design using VCAs prevents clicks and scratchiness as the fader wears. However, the movement can become mechanically stiff or sloppy in time, or become ingrained with dirt. Should this be the case the fader may need replacement.

The **XONE:92** crossfader is removable and can easily be replaced in a few minutes. Make sure you order the correct Penny & Giles version from your Allen & Heath dealer: Part number 002-719.

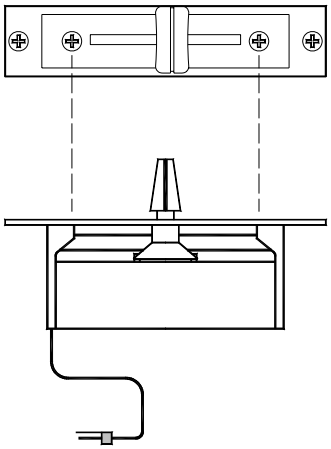

Use a medium size cross-point (Pozidriv) screwdriver to undo and remove the two outer screws on the crossfader plate. Do not remove the inner screws. Lift the crossfader assembly up and away from the console panel. Unplug the cable from the old crossfader and plug in the new assembly. Check that the connector is correctly aligned and pushed on. Replace the assembly making sure the cable faces the left side of the console. Refit the screws and test operation.

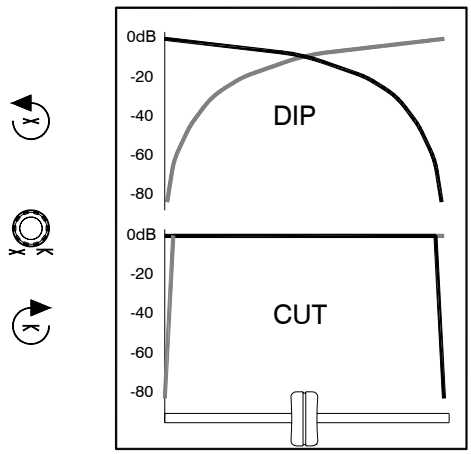

The VCF Filters

A **voltage controlled filter** is an audio filter where the cut-off frequency is altered by a DC control voltage rather than a variable resistor. This produces a much wider operating range and more control over the filter response to create unlimited combinations of tonal effect.

Two stereo VCFs are provided, one either side of the crossfader. Each can be switched in or out, has its own frequency sweep control and can be assigned to either side of the crossfader. Two independent Low Frequency Oscillators LFO provide filter modulation.

5 **FILTER ON switch**. Each filter has its own ON switch. The blue light-pipe lights when the filter is switched on. The signal is not affected by the filter if the switch is in its off position. Use this to punch the filter effect in or out.

6 **FILTER assign switch**. In the central position the music signal is not affected by the filter. Toggle to route the signal through the filter. To route to the left (X) filter make sure the switch is in its left position. Switch to the right position to route to the right (Y) filter. To avoid audible clicks only route channels to the filters when the filter is OFF.

7 **FREQ VCF sweep control**. The VCF control sets the cut-off frequency of the filter (-3dB point). Each filter has its own frequency sweep control to adjust the cut-off point anywhere from low to high frequency. Rotating the control during performance produces dynamic sweeping effects or filter sweeps. These large soft touch controls are positioned either side of the crossfader for convenient live operation.

8 **RESONANCE control**. Adjust this to change the 'Q' or 'sharpness' of the filters. This affects how they respond around the cut-off frequency. At the minimum MILD setting the filters have a gentle roll-off 'knee' giving a subtle, smooth response. At the clockwise WILD setting they produce a resonant feedback boost around cut-off resulting in some very dramatic performance effects. The sound varies according to the filter type selected. To avoid unexpected results it is best to start experimenting with RESONANCE set to a low position. Set the control to the "two o'clock" position for the flattest frequency response

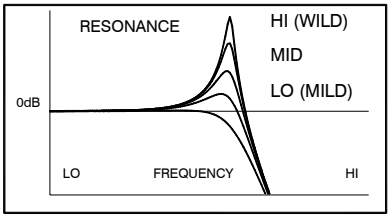

High RESONANCE settings can result in significant boost of selected frequencies. Reduce the channel GAIN if the signal levels increase enough to light the red PK leds in the output meters. Failure to do this may result in system overload and distortion.

9 **VCF TO XFADER control**. Press this switch to assign either filter to the crossfader. The crossfader can then be used instead of the FREQ VCF sweep control to create filter effects whilst crossfading.

10 **VCF LINK 2-1**. Press this switch to link FILTER 2 VCF to FILTER 1VCF. FILTER 2 FREQ can now be controlled by the FREQ VCF sweep control of FILTER 1. This can be used to synchronise the cut-off point of both filters. For instance, assign **Channel 1** to **Filter 1** and **Channel 2 to Filter 2**. Select a low pass filter on filter 1 and a high pass on filter 2. With both filters ON and the link switch selected, the low frequencies of channel 1 will be accurately joined to the high frequencies of channel 2. This can be used to produce to incredibly smooth mixes or to mix tracks that would otherwise clash when mixed conventionally.

LFO modulation

The **XONE:92** VCF filters are further enhanced by two independent LFOs. The LFOs can be applied to either VCF for additional cyclic filter modulation effects.

11 **LFO ON switch**. Each LFO has its own ON switch. The red led lights when the LFO is switched on. The filter is not affected by the LFO if the switch is in its off position. Use this to punch the LFO effect in or out.

12 **LFO DEPTH control**. Rotate control knob clockwise to increase the depth (amount) of the LFO modulation applied to the VCF.

13 **TAP tempo control**. 'Tapping' the button sets the speed of the LFO in time with the last two button presses. Once set, the light-pipe flashes red in time with the LFO.

14 **X2 tempo switch**. Press this switch to double the LFO speed; determined by setting the TAP tempo 13.

Filter Type Select

The filters are ‘state variable’. This means that they provide three simultaneous filter types, high-pass, band-pass and low-pass. Three large illuminated switches select which type is active. You can press any combination together to create different response types such as ‘notch’ and an interesting ‘all-pass’ effect. The switches are ‘soft switched’ for live performance, meaning that the audio signal is ramped between filter states to prevent audible clicks.

Note that the last selected type is lost when power is removed from the console. The LPF is always selected when power is applied.

The graphs below show the effect on the audio frequency response for the three filter types. The range of sweep from low to high frequency is shown together with the effect of adjusting RESONANCE (one frequency with several resonance settings shown).

The vertical scale shows the amount of cut or boost around the normal 0dB operating level. The horizontal scale shows the change in frequency from low (bass) to high (treble).

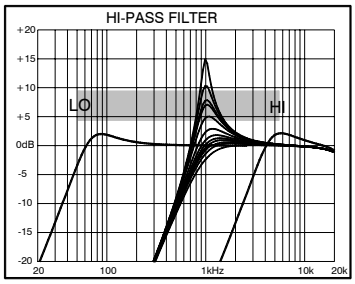

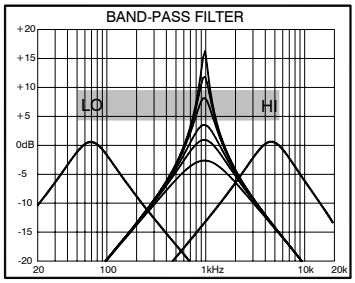

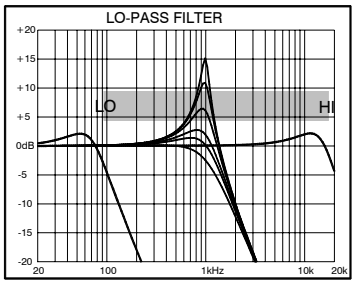

☺ **Tip**. Take some time to experiment with the filters before ‘going live’

11 **HPF**. Press this switch to select the high-pass filter. Frequencies below the cut-off point are removed. The cut-off point is adjusted using the large VCF control. At minimum little effect is heard as only sub bass frequencies are removed. Sweep clockwise to gradually remove the bass line followed by the higher frequencies. The highest frequency is limited to 10kHz as little useful material is heard beyond this.

☺ **Tip**. Use the HPF with the VCF as a mix aid. Set the VCF control to the nine o’clock position to remove all the low frequencies when bringing a track into the mix. Progressively rotate the VCF control anticlockwise to bring in the bass.

12 **BPF**. Press this switch to select the band-pass filter. Frequencies above and below the cut-off point are removed leaving just a narrow band of sound. Sweep VCF around its mid position to affect lead sounds such as keyboard and vocals.

☺ **Tip**. Try picking out individual sounds such as vocals and mixing them into the beat and bass of the opposite track to create a whole new mix. Add a little resonance to the BPF to lift the sound out of the mix.

13 **LPF**. Press this switch to select the low-pass filter. Frequencies above the cut-off point are removed. The cut-off point is adjusted using the VCF control. At minimum only sub bass remains. Sweep clockwise to gradually introduce the bass line followed by higher frequencies into the mix.

☺ **Tip**. Try sweeping the LPF back to a low setting to keep the beat and energy going while bringing another track into the mix. Try also punching in the filter and sweeping it back from high to low in time with the beat. Punch it out at the start of the next bar.

In addition to the three basic filter types you can experiment with new effects by selecting combinations of switches together. Press and release the switches together. They illuminate to show which filter types are active. For example:

HPF+LPF = **NOTCH**. Used with low settings of RESONANCE you get a phasing effect. Try sweeping the effect across the frequency range.

HPF+BPF+LPF = **ALL PASS**. A surprising effect considering that all frequencies are ‘passed’. However, the filter type interaction around the cut-off point creates an interesting effect that varies from subtle to dramatic depending on the RESONANCE setting.

Master Mix and Monitor System

The **XONE:92** provides two stereo main mix outputs with independent level control on balanced XLR and jack connections to drive the house PA amplifier system or additional zone feeds. You can make a music only recording by connecting to the independent record output. Full DJ monitoring facilities are available with independent headphones and booth monitors, together with stereo metering system. Every music channel signal can be checked individually or within any mix, ideal for system setup and performance cueing. Facilities such as Mono and Split-Cue switching are well suited to the way the professional DJ works.

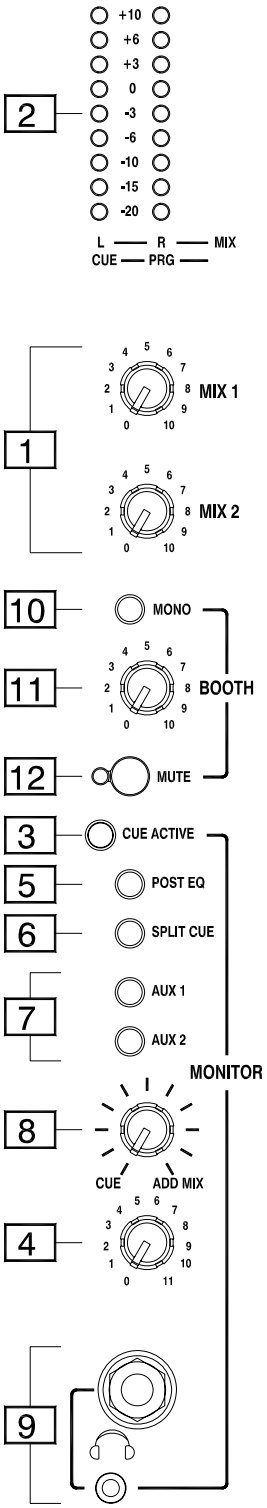

1 **MIX MASTERS**. Two rotary master controls adjust the output levels feeding the house PA. These are stereo controls which adjust the left and right signals simultaneously. They affect the stereo mix. Note that they do not affect the record and booth outputs. The MIX 1 maximum position represents unity (0dB) gain. The MIX 2 maximum position represents +10dB gain. If you find yourself normally setting the controls in the lower part of their travel then the connected equipment may be too sensitive for the operating level of the console. With the controls set to their maximum positions adjust the input level trim of connected equipment for the loudest level allowed.

In a club or similar installation strict sound level and noise regulations may apply. Check that your system levels are set up to comply.

2 **MIX / MONITOR METERS**. A pair of meter bars displays the level of the selected headphones monitor source. This is either the main LR mix, an Aux mix or Cue. When SPLIT CUE is selected the left meter displays the active CUE signal, the right displays PRG (program), both in mono.

Each meter has 9 leds to indicate signal levels from a low –20dB. Green and blue leds indicate normal operating levels. The top red led lights at +10dB still providing a healthy 12dB before clipping. Meter '0' represents +4dBu at the MIX 1 XLR outputs and -2dBu at the MIX 2 LINE outputs. The meters are peak responding with a fast attack and are therefore able to display fast transients accurately.

3 **CUE ACTIVE indicator**. A large red led lights when a channel CUE is active. This indicates that the selected channel CUE signal is heard in the headphones and displayed on the monitor meters. It is important to use CUE to set the channel levels correctly to maintain the wide dynamic range achievable with this console. Reduce the gain if the red +10 leds flash.

4 **HEADPHONES level control**. Adjusts the level of the signal in the stereo headphones. This does not affect the level of the local booth monitor.

WARNING Some headphones are more sensitive than others and can produce higher output levels. To avoid damage to your hearing start with the level control at minimum and turn up only as much as is needed to maintain comfortable listening level. Do not drive headphones at high listening levels for long periods of time.

5 **POST EQ switch**. In the normal up position the headphones and meters monitor the Pre-EQ cue signal from each music channel. This means that you will not hear changes made in the EQ, which can be useful if you dramatically alter the frequency response by cutting all LF, but still need to monitor the beats to keep a track in sync. Pressing this switch will allow you to monitor post EQ and hear any changes made to the channel EQ. Toggling between pre and post EQ is useful to compare the effect of the EQ.

6 **SPLIT CUE switch**. Press this switch to change the way CUE operates. Normally, pressing a channel CUE switch overrides both left and right monitor program signals with the stereo cue signal. With the switch pressed, CUE overrides just the left channel leaving the program in the right channel. The left monitor meter displays the cue signal, right displays program. This is invaluable in club mixing where the main program should remain audible while cueing other channels ready to bring them into the mix. It is very useful when beat mixing using headphones. Note that Cue does not affect the main output or booth monitor.

7 **AUX 1-2 switches**. In the normal up position the headphones and meters monitor the main mix. Press these switches to select either of the stereo Aux mixes as the headphones monitor source. Note that this does not affect the main outputs or booth monitor.

☺ **Tip**. Use split-CUE to match the beat between two tracks when beat mixing, or check the effect before cut mixing. Alternatively, you can select either of the Auxs and raise the sends on the two channels to give you a pre-fade stereo **PREVIEW** of the mix which does not affect the main output. In this way you can hear exactly how it will sound in the main mix before you raise the channel faders or flip the crossfader. Use the Aux send controls as your preview faders. Pressing any CUE switch will override the preview.

8 **CUE/ADD MIX control**. Allows the main mix output to be added to the CUE signal. Turned fully anticlockwise, only the active CUE is heard through the headphones when CUE is active. Gradually turning clockwise introduces the main mix output to the headphones, together with the active CUE. Selecting SPLIT CUE will automatically override this control.

The HEADPHONES Monitor

The DJ uses the headphones to check the mic and music sources and to cue tracks ready to bring them into the mix. The headphones isolate the dance floor sound from the DJ and also prevent the audience from hearing the monitor.

9 **HEADPHONE OUTPUTS**. These outputs are positioned on the front panel so that the DJ can plug in favourite headphones without needing access to the rear connector panel. Headphones are available in many different styles, impedances and volume ratings. To get the best from your system we recommend that you use high quality closed-ear headphones with ¼" jack connection in the range 30 to 100 ohms. 8 Ohm headphones are not recommended.

The BOOTH Monitor

The DJ uses the booth monitor to reinforce the music level in his booth so that he can 'feel' and interact with the beat. This provides an independent music only monitor that is not affected by the main Mix master or Cue controls. To avoid acoustic feedback the microphone signals are not routed to the booth monitor.

10 **MONO switch**. Sums the left and right monitor signals together so that the selected stereo source can be checked in mono. Use this to check for mono compatibility, especially important in dance floor and recording applications. A drop in level or loss of low frequencies when pressed indicates reversed polarity between the left and right signals. Alternatively, you can select this if you wish to run the booth monitor in mono rather than stereo. Note that the MONO switch does not affect the headphones monitor.

11 **BOOTH MONITOR level control**. Adjusts the level of the signal to the stereo booth monitor output. This does not affect the headphones.

12 **MUTE switch**. Press to mute the booth monitor output. The red led lights when the monitor is muted. The headphones and main outputs are not affected. This is useful when the DJ chooses to work with headphones only, check the sound level from the dance floor, or quieten the monitor to talk to staff or take a request.

MIDI Control of External Devices

MIDI is short for Musical Instrument Digital Interface conceived in the 1980's so that keyboards and other electronic instruments could have a common interface allowing them to communicate with each another. Applications now include sound and lighting consoles, computer sequencing, show control and performance effects control. The **XONE:92** is unique in being the first DJ mixer to include MIDI functionality. Equipped with a MIDI out socket, **XONE:92** allows the DJ to control other external MIDI devices from featured front panel controls. This adds to the unique combination of creative tools available to the DJ.

XONE:92 can be used to remotely control effects units, sequencers, drum machines etc via MIDI providing the unit you wish to control is compatible with the MIDI controller codes generated. Most computer sequencing programs allows you to map different controller codes to virtually any function within the software, so providing the greatest flexibility of control. Refer to the user guide of the device or program you wish to use to check for compatibility. The default MIDI channel used is 16, but this can be changed internally to 15 if required.

Basic Setup

Connect MIDI OUT from the **XONE:92** to the MIDI IN of the device you wish to control. Use a standard 5-pin MIDI lead. Set the device MIDI channel number to 16 (or 15 if the **XONE:92** has been changed internally). Refer to the device user guide for further details. If you want to use the **XONE:92** as a master clock, for instance with a drum machine or sequencer, you need to set the device to receive External MIDI clocks. Once again you need to refer to the relevant user guide.

For more detailed descriptions of how to set up specific software/effects units etc please log on to our web site at www.xone.co.uk These descriptions will be updated from time to time as more applications and compatible devices are included.

XONE:92 as a Master Tempo Controller

Using the **XONE:92** to sync an external sequencer or drum machine to a pre-recorded source takes practice, but once learned can be achieved quite quickly, and is a great way to add your own loops, patterns and so on to your favourite tracks.

Once you have got the device to respond to the **XONE:92** master MIDI clock and stop/start button, use the following method:

Set the Tempo/Data control [1] to its center (detented) position, with the Stop/Start button [2] OFF. Tap in the tempo of the track you want to sync to, using the VCF 2 LFO Tap Tempo button [3] Accuracy here is very important, try to tap in the beat as precisely as possible; you will find that you get more adept the more you practice. Once you have a near approximation of the tempo, hit the Start button to set off the sequencer on the first beat of a bar.

Depending on how accurately you have tapped in the beat the sequence should play in sync for a short while, but will probably drift after a few seconds. If the tempo is too fast, turn the Tempo/Data control anti-clockwise to slow down the MIDI clock, if it is too slow, turn it clockwise to speed it up. After each adjustment restart the sequencer until the clock speed has been set to match the beat and maintain synchronisation. The Tempo/Data control has finer effect on clock speed in and around its center position, and greater effect as it is rotated towards either end. For this reason the more accurate tap tempo you start with the easier it will be to fine tune to stay in sync.

Remember to always return the Tempo/Data control to the center position before tapping in a new BPM.

MIDI Control Codes

XONE:92 control	Controller Code Generated	Controller Name
VCF 1 FREQ	CC12	Effect Control 1
VCF 2 FREQ	CC13	Effect control 2
Crossfader movement	CC92	Tremolo Level
Data Controller (internal option)	CC94	Celeste Level
Tap Temp LFO 2	MIDI Clocks	
Start/Stop	MIDI Start/Stop-rewind	

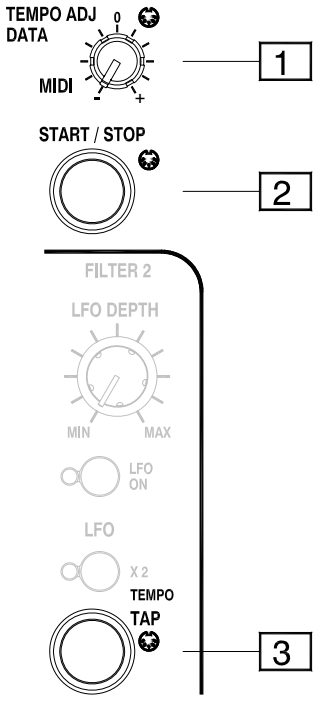

1 **TEMPO ADJ / DATA control**. The default application for this control is to allow adjustment of the MIDI clock speed set by the VCF 2 TAP TEMPO button 3 . With the control in its mid position the clock speed is unaffected. Rotate anti-clockwise to reduce, or clockwise to increase the clock speed. This allows external sequencers or drum machines to be accurately aligned to the BPM of pre recorded tracks.

An internal jumper can be reassigned to change the function of this control to a dedicated DATA send, and will output Control Change **CC94. See Service Options for details.**

2 **START / STOP button**. Sends MIDI start/stop data to an external sequencer or MIDI device. The Lights yellow when pressed. Push once to transmit MIDI start data, push again to transmit MIDI clock stop+rewind data. MIDI output:

ON (1st press), **STOP/REWIND** (2nd press).

3 **TAP TEMPO button**. The tempo of the MIDI clock is set by tapping it in using the button. The BPM is determined by the last two button presses.

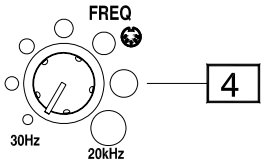

4 **FREQ VCF sweep control**. Both controls independently output MIDI data **0** to **127**:

VCF 1 FREQ: Control Change **CC12**

VCF 2 FREQ: Control Change **CC13**

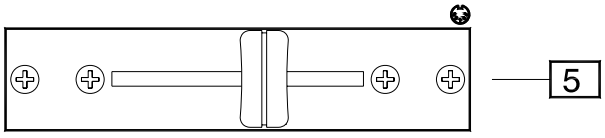

5 **CROSSFADER**. Move the crossfader to output MIDI data **0** (farthest left) to **127** (farthest right).

XFADER: Control Change **CC92**

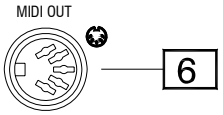

6 **MIDI OUT socket (chassis)**. 5 pin DIN socket. Outputs all **XONE:92** MIDI data to an external MIDI compatible device.

XONE:92 MIDI Implementation Chart

O = Available X = Not used

Function	Transmitted	Received	Remarks
Basis Channel			Internal DIP switch setting
Default	16	X	
Option	15	X	
Mode			
Default	X	X	
Messages	X	X	
Altered	X	X	
Note Number	X	X	
Velocity			
Note ON	X	X	
Note OFF	X	X	
Aftertouch			
Keys	X	X	
Channel	X	X	
Pitch Bend	X	X	
Control Change			
12	O	X	
13	O	X	
92	O	X	
94	O	X	Internal jumper option
Program Change	X	X	
System Exclusive	X	X	
System Common			
Song Position	X	X	
Song Select	X	X	
Tune Request	X	X	
System Real Time			
Clock	O	X	
Commands	O	X	
Aux Messages			
Local On/Off	X	X	
All Notes Off	X	X	
Active Sensing	X	X	
System Reset	X	X	

Glossary

The following section is included to help you understand some of the technical terms and jargon referred to with consoles of this type. It is by no means a complete reference. Please refer to specialist audio publications should you wish to know more.

Amplitude Another term used for signal level.

Asymmetric EQ An equaliser with a different amount of cut and boost of the frequency bands. This is used to restrict the available boost so preventing system overload while providing extended cut to allow dramatic performance effects by 'killing' selected frequencies.

Attenuate Reduce the signal level.

Aux Auxiliary. An independent mix derived from the channels for various functions. This can be set pre (before) or post (after) the channel fader. Pre-fade sends are often used for foldback monitors or DJ sampler effects feeds. Post-fade sends are often used for reverb effects, zone and special recording feeds.

Balanced, Unbalanced Refers to the type of input or output signal connection. An unbalanced connection has two signal carrying conductors, one of which is the cable shield. A balanced connection has three conductors, two for signal and a shield which is connected to earth. Because the signal conductors are at the same impedance and of opposite polarity they are better able to cancel and therefore reject interference and noise pickup. It is standard practice to use balanced connections for long cable runs, for example to amplifiers, or cables carrying sensitive or low level signals, for example microphones.

Bandpass A filter with a bell-shaped response for attenuation of frequencies either side of the centre frequency.

Beat Mixing Using the variable pitch controls on turntables/CD players to synchronise the rhythm track of two separate songs, so that the beat remains constant when smoothly cross-fading from one to the other.

Bi-amping Providing separate amplifiers to drive the high and low frequency units in a loudspeaker. This requires a crossover processor that splits the frequency band into low and high. Bi-amping usually produces a cleaner and more controllable sound in larger systems.

BPM Beats Per Minute. The measurement of the rhythmic beat of the music.

Booth The area, often enclosed, where the DJ operates. Usually provided with local booth monitor loudspeakers.

Cardiod The response of a microphone which is more sensitive in front than behind. This is generally used for vocal miking to reduce acoustic feedback.

Cut Mixing Moving the cross-fade control sharply from one side to the other, to either pick out a sound, a hi-hat, kick drum etc, or to drop straight into another record. Also known as chopping.

Cartridge The pickup in a turntable. Uses a needle to pick up vibrations from the record (vinyl) and convert this to electrical signals that feed the console. The cartridge is usually fitted to a removable headshell that plugs into the turntable arm.

Clipping The harsh distorted sound that results when the signal hits the maximum level possible. This is set by the power rail voltage. Above this there is simply no more voltage available so the signal is 'clipped'.

Compact Disc (CD) Well established stereo player using digitally mastered pre-recorded flat discs. Becoming popular with DJs as a replacement or alternative to vinyl mixing. Recordable CDs are now available.

Crossfader A short horizontally mounted fader for smoothly fading one music track in while fading the other out. Often used by the DJ for cutting and layering sounds while mixing.

Cue A monitor system provided for the DJ or console operator to check individual channel signals using headphones while lining up tracks ready to introduce into the mix. This does not affect the main console outputs.

DAT Digital Audio Tape. A type of digital 2 track recorder that uses a small tape cartridge to produce high quality recordings in a compact format.

dB Decibel. The unit of measurement for audio signal level. This is logarithmic to follow the response of the human ear. 'dB' is a relative measurement to compare one level with another, for example gain from input to output. 'dBu' is an absolute measurement referenced to a voltage standard where 0dBu = 0.775V rms. The console main outputs operate at the professional 'high' standard of +4dBu (1.23V) = '0' reading on the meters. ''dBV' is a similar measurement but refers to a 1V standard. It is common for consumer equipment to operate a the 'low' standard of –10dBV (316mV). 'dBA' refers to sound pressure level and is measured using the 'A' scale that 'hears' in the same way as the human ear.

DJ Disc Jockey. The console operator sequencing and playing the music tracks. Some simply play the tracks, others talk over with introductions and announcements, and others provide an entertaining performance by mixing and shaping sounds to create a completely different musical experience.

Drum Machine An electronic drum simulator as used by keyboard players and in electronic music. This now provides another DJ tool to create an alternative beat to mix in with the music.

Dynamic Range The difference expressed in dB between the highest and lowest signal levels possible. This is limited by the clipping level and residual noise floor respectively.

Earth Also known as 'ground'. The term for the electronic signal reference. This connects to the mains supply earth point and all cable shields and conductive equipment cases. It provides the return for the signal voltage within the equipment. It also ensures operator safety by removing the possibility of electric shock should the mains voltage touch any metal part.

Earth Loop The result when the equipment sees more than one path to the system earth. Current flows because a resistive loop susceptible to radio and mains interference is formed. This can result in audible hum or buzz in the system.

Equaliser (EQ) This provides cut or boost of selected frequencies (equalisation) for tonal shaping of the sound. This is similar to the bass and treble controls of domestic hifi amplifiers. However, **XONE** provides 4 independently controllable frequency bands for corrective or effective sound shaping.

Feedback Also known as 'howlround' or 'ringing' this is the rapidly increasing tone produced when a microphone picks up its own signal from the speakers. It is usually a shrill and annoying squeal that should be quickly dealt with by reducing mic gain or equalising the system to notch out the offending frequencies.

Gain This is the boost or attenuation applied to the source signal in the channel preamp stage to match it to the console operating level. For example, a large amount of gain is need to match low microphone signals. It is set using the console meters. Gain is not used for level (volume) control.

Headroom The amount of level available expressed in dB to handle peaks above the normal 0dB operating level.

Hz Hertz. The measurement of frequency. The audio spectrum ranges from a low (bass) frequency of 20Hz to a high (treble) 20kHz. Not many sound systems reproduce the full range. Average hearing does not extend much beyond 15kHz or so. Response is further impaired if the ear is subjected to continual high sound pressure levels.

Highpass A filter that attenuates frequencies below the cut-off frequency.

Hum Apart from not knowing the words… this is the audible noise that usually results from mains interference pickup, earth loops, bad interconnections and induced power supply and lighting fields. It is usually at mains frequency (50/60Hz) or a related harmonic.

Impedance (Z) A technical term for the resistance of a signal conductor to ground. Low impedance usually refers to microphones of 200 ohms or less, and line signals typically less than 100 ohms. Low Z sources are less prone to interference pickup. Inputs are usually high impedance so that one source can connect to more than one channel without signal loss. Note that the operating impedance of a connection is set by the impedance of the source, not that of the unconnected input.

Impedance balanced Refers to the type of output signal connection. Has three conductors, two for signal and a shield which is connected to earth. Provides interference rejection similar to a fully balanced connection because the two signal conductors are matched at the same impedance. However, the drive capability is less because the signal is carried by only one conductor.

LFO Low Frequency Oscillator. Oscillator used as a cyclic modulation source.

Limiter A signal processor that limits the maximum level possible by preventing the signal going over a predetermined threshold level. This is very useful in club installations where it is inserted between the console and house system amplifiers to prevent the DJ exceeding the maximum allowable volume.

Lowpass A filter that attenuates frequencies above the cut-off frequency.

MC Master of Ceremonies. The presenter who introduces the performances and maintains the running order.

MIDI Musical Instrument Digital Interface. A protocol designed in the early 1980's to enable electronic instruments to communicate.

MiniDisc A type of low cost digital 2-track recorder that uses a disc similar to but smaller than that used by computers. It records up to 74 minutes of stereo material and is regarded as the modern replacement for the audio cassette recorder. It has the added facility to label and edit tracks.

Mono The left and right stereo signals summed together as one.

Mute To turn off the signal.

Noise Generic term for an unwanted signal. This may be residual electronic hiss, hum, buzz, clicks and pops, or simply loud undesirable music.

Noise Floor This is the term for the residual electronic noise produced by all powered audio equipment. It usually sounds like a constant hiss, although some equipment may suffer from residual hum as well.

Omni-directional The response of a microphone which picks up sounds equally all round. Not suited to live vocal applications as they are more prone to feed back.

Pan Panoramic. A control that adjusts the balance of the signal in the left and right speakers.

Peak Meter A type of signal meter that has a very fast attack and slower release. This picks up the fast signal transients and holds them long enough for the operator to see the activity on the display. These meters typically use led (light emitting diode) displays.

Phantom Power The DC voltage required by certain microphones to power the capsule. These are usually sensitive studio grade mics not suited to DJ mixing. The power is provided by the console using the two signal conductors in the balanced connection. There is no provision on **XONE** for this type of microphone.

Phono Abbreviation for phonograph as in 'turntable'. Usually means RIAA equipped input when marked on console inputs. Can also refer to the RCA 'phono' type pin jack connector found on turntables, CDs and much domestic equipment.

Polarity Sometimes referred to as 'phase' this is the + / - sense of a balanced signal or loudspeaker connection. Reversed polarity should be avoided and checked for as it can cause uncomfortable phasing effects between speakers.

Resonance Applied to the filters this is the effect of accentuating frequencies around the cut-off point to produce subtle or dramatic phasing effects.

RIAA Record Industry of America Association, responsible for the long established equalisation standard that is applied to the signal produced by a turntable cartridge. Due to the physics of vinyl reproduction the needle produces a reasonable high frequency signal but much less low frequency. An RIAA pre-amplifier compensates for this by inversely attenuating the high and boosting the low frequencies.

Reverberation The way in which sound reflects and bounces around the room after the source is removed. This depends on the size and shape of the room as well as the materials such as carpets, curtains and clothing that absorb certain frequencies.

Reverb Effect This is a signal processor that connects to the console to artificially simulate the reverb effect. Parameters such as decay time, diffusion and amount of reverb can be controlled. Typically selected sounds are sent to the processor by turning up the channel post-fade aux sends. The processed (wet) signal is returned to the mix through a channel where it adds to the direct (dry) signal routed from the channel fader.

RPM Revolutions Per Minute. The measurement of turntable speed.

Sampler Another performance effect popular with DJs. The channel signal is sent to a digital processor that samples (stores) a short duration of sound. The output is returned through a channel and replayed by pressing a trigger. Many samplers provide creative effects such as repeat and reverse.

Scratch Mixing The art of rhythmically rocking a record back and forward on a turntable, to repeat a certain sound, a vocal or tone, at the same time operating the cross-fader to create a syncopated "wah wah" chirp added over a bass heavy back beat.

Signal-to-Noise Ratio (SN) This is the difference expressed in dB between the normal 0dB operating level and the residual noise floor. It represents how far above the equipment hiss level the signal operates. More is better.

Slipmat A fabric turntable mat positioned under the record so that the DJ can hold it stationary ready to let go for a fast start at the point cued.

Sound-to-Light A processor that converts an audio signal into a control voltage that triggers lighting effects. This produces the popular disco effects with lights flashing in time to the beat.

Split Cue A facility to listen to the cue signal in one ear while keeping the program in the other. Used for matching the beat while cueing a new track.

Sub Bass A loudspeaker designed to reproduce only very low frequency sound, typically from around 50 to 120Hz. A crossover is used to route only the low frequencies to the sub.

TRS Jack Refers to the 3-pole (stereo) ¼" jack plug with Tip, Ring and Sleeve connections.

Turntable Otherwise known as a 'record deck' this plays vinyl discs, still the most popular source for DJ mixing. It is common for the cartridge to plug directly into the mixing console 'phono' input which provides the RIAA equalisation required. The turntable usually has variable speed control so that the DJ can synchronise the beat between tracks.

VCA Voltage Controlled Amplifier. An audio gain element whose level is controlled by a remote DC voltage rather than through a fader or rotary control.

VCA Crossfader Functions as an audio crossfader but with the audio level controlled by a DC voltage produced by the fader. This voltage can be electronically filtered and is therefore able to remove the clicks, scratches and drop-outs associated with worn audio faders.

VCF Voltage Controlled Filter. An audio filter whose cut-off frequency is controlled by a remote DC voltage rather than a rotary or switched control. This provides greater range and capability.

XLR The professional standard 3 pin round connector used for microphone and other balanced connections. Equipment female sockets are for inputs, male for outputs.

Specifications

0dBu = 0.775 Volts rms, +4dBu = 1.23V rms 0dBV = 1 Volt rms, -10dBV = 316mV rms

Max output level	MIX 1	+22dBu into 47 ohm
	MIX 2	+20dBu into 47 ohm
	AUX	+21dBu into 47 ohm
	REC	+11dBV into 600 ohm
Internal headroom	Channels	+22dB
Freq response	+/-0.5dB 5Hz to 30kHz	
Distortion	< 0.003% THD+noise @1kHz	
Crosstalk	> -93dB Inter-channel	
MIC EIN 22-22kHz	-126dB 150 ohm source	
Residual noise	MIX 1	-99dBu
	MIX 2	-106dBu
	AUX	-90dBu
	BOOTH	-106dBu
	REC	-96dBu
Mix noise	MIX 1	-88dBu (-90dB S/N)
	MIX 2	-90dBu (-88dB S/N)
	AUX	-88dBu (-86dB S/N)
	BOOTH	-89dBu (-87dB S/N)
	REC	-96dBu
Channel meters	Peak reading 9 led -20 to +10	

Main meters	Peak reading 9 led -20 to +10
Mic EQ	4-Band +/-15dB 100, 250, 2.5k, 10kHz
Music EQ	4-Band +6dB / -30 (Mids)
	Infinity (12dB/Oct) LF/HF
	250,350, 2k, 2.5K
Ch fader	60mm stereo or rotary VCA
Mix 1 & 2 faders	Rotary
Crossfader	45mm stereo VCA Replaceable
Filters	Dual stereo VCF Analogue
Panel	Steel
PSU	Internal switch mode
Mains In	3 pin IEC socket
Power Lead	Country dependant
AC mains	110 to 240V AC @ 47/63Hz
Consumption	30W max
Fuse rating	100-240V AC T500mAL

Dimensions and Weights

The console is fitted with rubber feet for desktop operation. A screw on rack ear kit is included for rack or plinth mounting.

	Width	Height	Depth	Weight
Desktop	320 mm (12.6”)	87.6 mm (3.5”)	358 mm (14”)	6 kg (13 lbs)
Rack ears fitted (1)	370 mm (14.6”)	87.6 mm (3.5”)	358 mm (14”)	
Rack ears fitted (2)	482 mm (19”)	87.6 mm (3.5”)	358 mm (14”)	
Packed	470 mm (18.5”)	210 mm (8.3”)	400 mm (15.7”)	8 kg (18 lbs)

Rack Ears

Allow permanent fixing in a plinth or rack system. Rack Ears bolt on to the sides of console in three orientations. **Ensure air vents are not obstructed.** Fix in place using M6 screws or bolts.

Can be fitted two ways: **Either flange flush with top panel or flush with underside of chassis.**

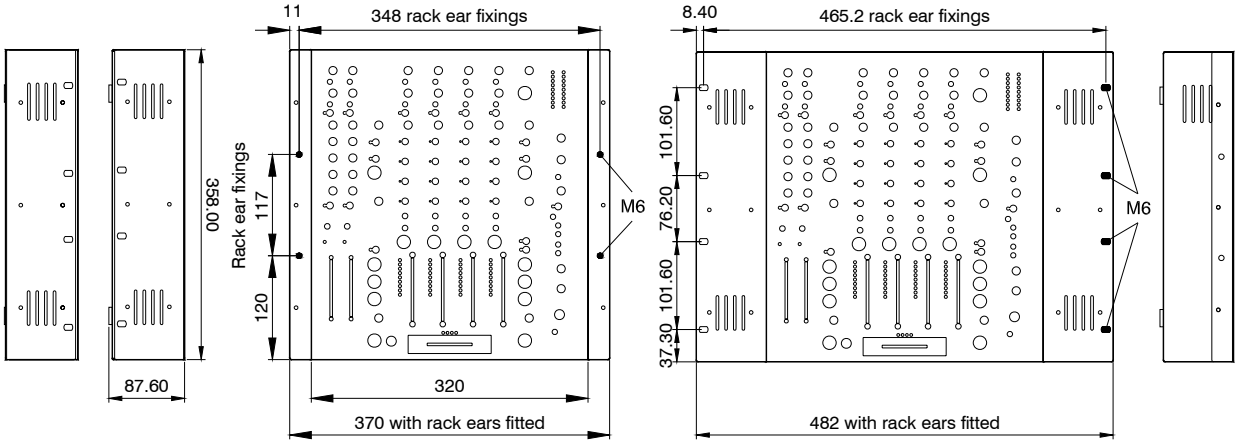

XONE:92 BLOCK DIAGRAM

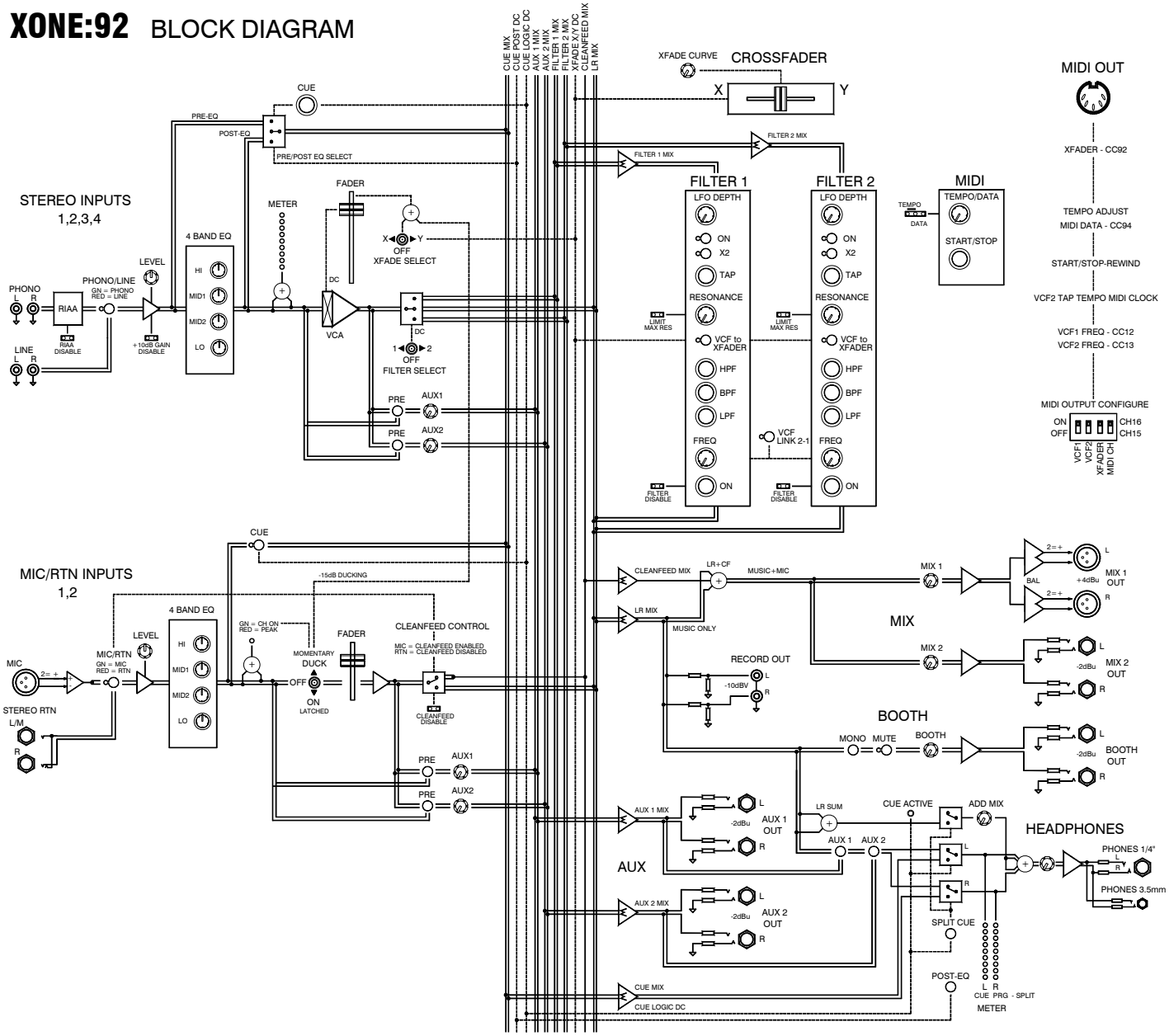

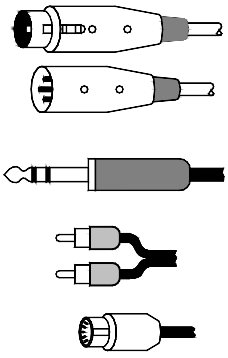

Connector Types

XLR male and female connectors :	Pin 2 = hot (+) Pin 3 = cold (-) Pin 1 = GND
TRS input and output connectors :	Tip = hot (+) Ring = cold (-) Sleeve = GND
RCA PHONO pin connectors	
DIN 5 pin male MIDI connectors	Standard MIDI cable

Input Connections

	Type	Impedance	Sensitivity
CH1,2 IN (Mic)	Balanced XLR female	<2k ohm	-47 to –10dBu
(Stereo Return)	Unbalanced TRS jack	6k ohm	-15 to +20dBu
CH1,2,3,4 (Phono)	RCA phono RIAA	47kohm/330pF	3 to 100mV
(Stereo Line)	RCA phono	>20k ohm	-10 to +20dBu

Output Connections

	Type	Impedance	Nominal Level
MIX OUT 1 L,R (XLR)	Servo Balanced XLR male	47 ohm	+4dBu
MIX OUT 2 L,R (jack)	Impedance balanced TRS jack	47 ohm	-2dBu
RECORD OUT	RCA phono	600 ohm	-10dBV
AUX OUT 1 & 2 L,R	Impedance balanced TRS jack	47 ohm	-2dBu
BOOTH OUT	Impedance balanced TRS jack	47 ohm	-2dBu
HEADPHONES	¼" and 3.5mm, Tip = L Ring = R	30 to 600 ohm recommended	

Installer Link Options

CAUTION : The following service instructions are for use by qualified personnel only.

To reduce the risk of electric shock do not perform any servicing other than that described in the operating instructions unless you are qualified to do so.

Refer all servicing to qualified service personnel.

The **XONE:92** has several internal option settings designed in. Some of these are primarily for setting up the mixer in a fixed installation situation, and the others can be used to reconfigure the MIDI system.

To gain access to these options the top panel assembly needs to be separated from the chassis. This operation should only be carried out by qualified service personnel.

IMPORTANT! Disconnect mains input lead before removing the top panel

Removal of the top panel requires the use of a Torx T10 screwdriver. Use a good quality tool to prevent rounding the screw heads. First remove the 4 pipped TORX screws located on rear panel in the center of each block of input channel RCA (Phono) connectors, and then undo the 8 M3 x 8 screws that hold the front panel to the chassis. Lift the front edge of the top panel until the two filter PCBs are clear of the chassis, and then pull the top panel gently forward and up until access can be gained to unplug the power cable from the power supply located on the right hand side of the chassis. Continue to lift the front edge of the top panel up until it is possible to unplug the two harnesses from the rear connector PCB. Lift the top panel clear of the base and place on a clear work surface.

Reassembly is the reverse procedure, but take great care to fit the harnesses correctly and to ensure that the ribbon cables do not get trapped between any of the PCBs and the chassis. Refit the panel screws first and tighten evenly with the chassis held firmly on a flat work surface. Finally refit the rear connector screws.

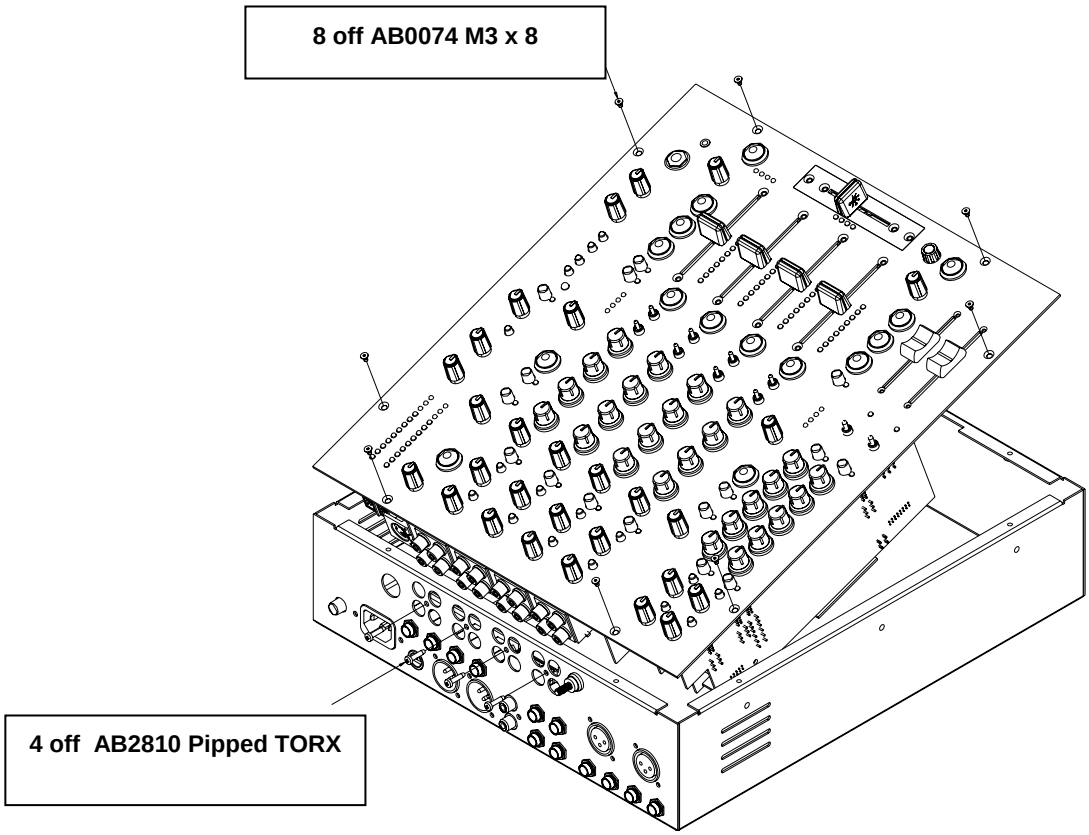

Input Channel

There are two configuration options designed into the input channel; one to convert the RIAA turntable input to operate with Line sources, the other to disable the input level +10dB gain. To disable the functions plug the jumpers on to one leg of the connector. This retains them for future use if needed.

Input Gain Disable

Locate and remove the two jumper sleeves JP5, JP6 illustrated in detail **A** to disable the input gain. Full clockwise rotation of the input level control will now provide unity gain and not +10dB.

RIAA Disable

To convert the RIAA phono pre-amplifier to a line level input locate and remove the two jumper sleeves JP2, JP4 detail **B** and the two jumper sleeves JP1, JP3 detail **C**

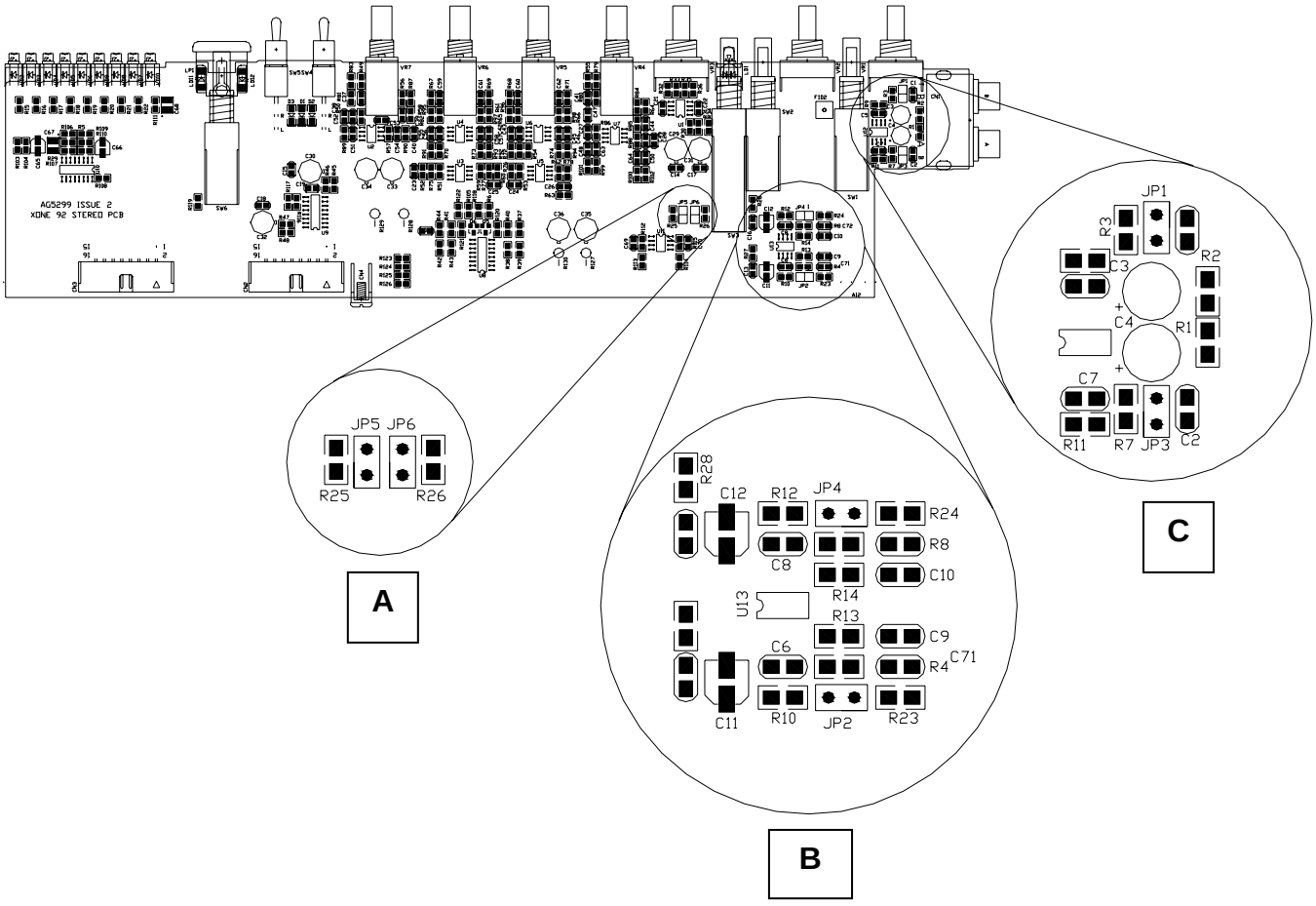

VCF 1 and 2 Filter PCB

There are several configuration options on the filter PCB. These are maximum resonance limit, VCF filter disable, and change default MIDI setup (**Filter 2 Only**). To disable the functions plug the jumpers on to one leg of the connector. This retains them for future use if needed.

Filter Disable

Refer to detail **A** locate and remove the jumper sleeve to prevent the filter from being switched on. Maximum filter resonance can be limited by removing the two jumper sleeves illustrated (also in detail **A**).

MIDI - Filter 2 only

Refer to detail **B**: A four way dip switch selects which controls on the **XONE:92** output MIDI data. The default setting is all ON, set each switch to off to prevent the associated control from sending MIDI controller messages. The MIDI output channel is set to 16 as a factory default; this can be changed to 15 by changing over the ”CHANNEL” dip switch.

The Tempo/Data controller default configuration provides a means of fine tuning the MIDI clock speed. This control can be reconfigured as a dedicated Data send (CC94) by moving the jumper sleeve for VR4 from the T (Tempo) position to the D (Data) position.; right hand side of detail **B** With the jumper in the D position MIDI clocks will still be transmitted via LFO 2 tap tempo button.

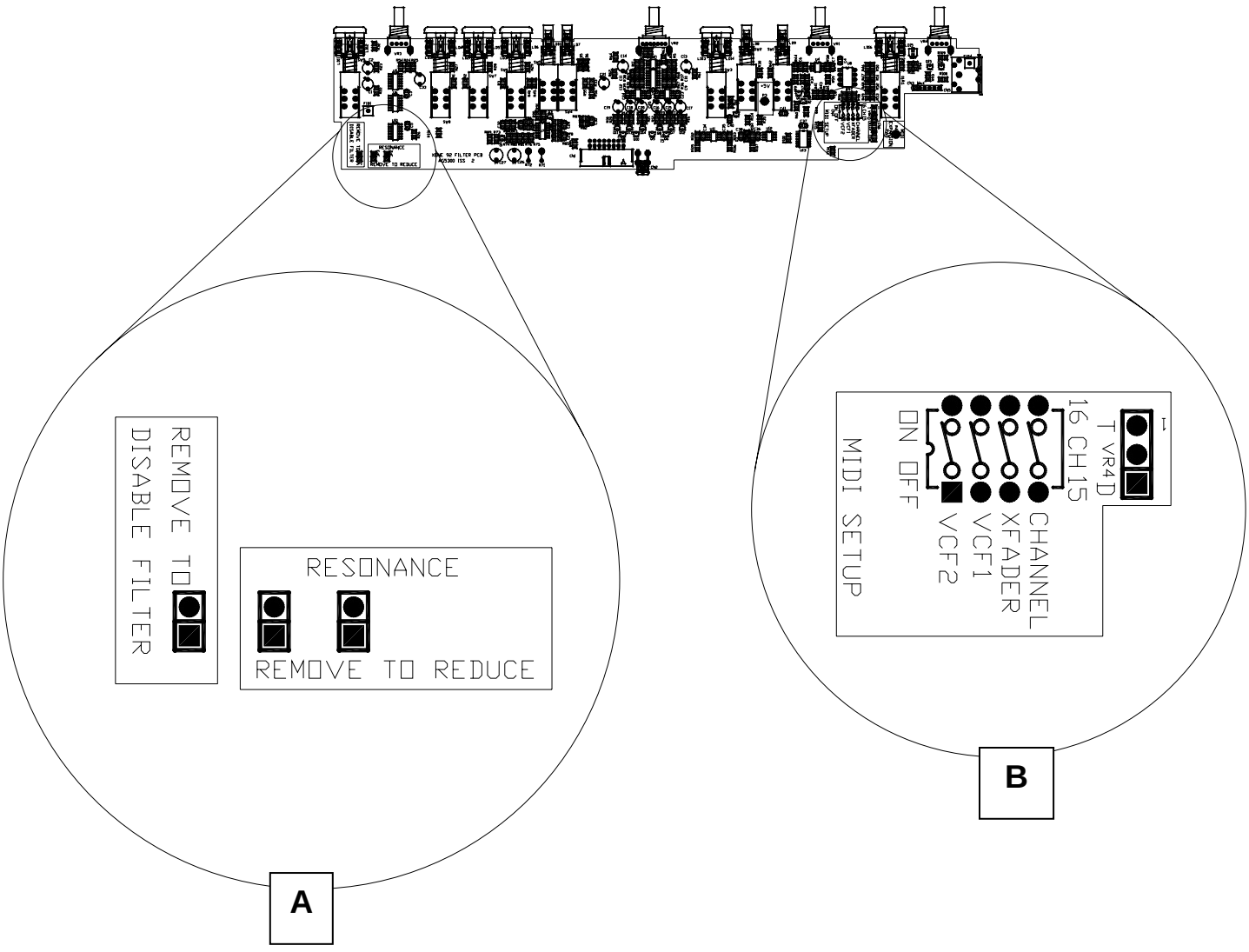

XONE:92 CUE SHEET

Photocopy and use to log your console settings.

1	2
MIC	MIC
LINE	LINE

1	2	3	4
PHONO	PHONO	PHONO	PHONO
LINE	LINE	LINE	LINE

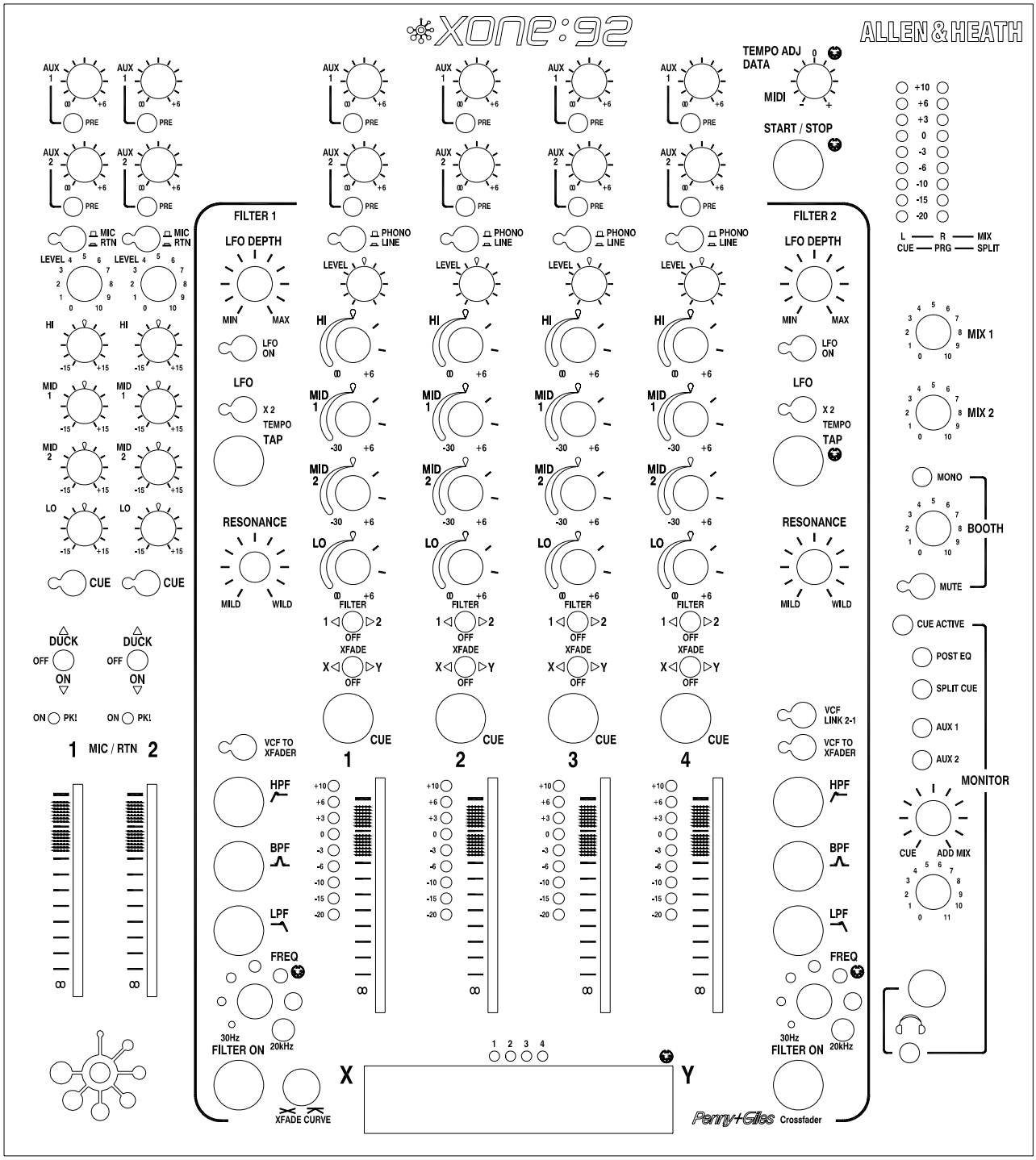

Check out my Internet site :

http://www.xone.co.uk