ORDER NO. DAD8404007580

Service Manual

Supplement

Turntable System

SL-1200MK2

[M], [MC],
[E], [EK], [XL], [EG], [EB], [EH],
[EF], [Ei], [XA], [PA], [PE], [PC]

SL-1210MK2

[E], [EG], [EH]

Area:

- [M] is available in the U.S.A.
- [MC] is available in Canada.
- [E] is available in Switzerland and Scandinavia.
- [EK] is available in United Kingdom.
- [XL] is available in Australia.
- [EG] is available in F.R. Germany.
- [EB] is available in Belgium.
- [EH] is available in Holland.
- [EF] is available in France.
- [Ei] is available in Italy.
- [XA] is available in Southeast Asia, Oceania, Africa, Middle-Near East and Central South America.
- [PA] is available in Far East PX.
- [PE] is available in European Military.
- [PC] is available in European Audio Club.

*SL-1200MK2 is the model for silver type.
*SL-1210MK2 is the model for black type of SL-1200MK2.

Please use this manual together with the service manual for Model No. SL-1200MK2/1210MK2.

English

Refer to SPEC Changes

Specifications

Specifications are subject to change without notice for further improvement.
Weight and dimensions shown are approximate.

General

Power supply:	120V, AC 60 Hz (For [M], [MC] area) AC 110-120/220-240V, 50 or 60 Hz (For other area)
Power consumption:	14 W (For [M], [MC] area) 13.5 W (For other area)
Dimensions: (W x H x D)	45.8 x 19.2 x 36 cm (17-27/32" x 8-19/64" x 14-11/16")
Weight:	12.5 kg (27.6 lb)

Turntable section

Type:	Quartz direct drive Manual turntable
Drive method:	Direct drive
Motor:	Brushless DC motor
Turntable platter:	Aluminum diecast Diameter 33.2 cm (13-1/64") Weight 2 kg (4.4 lb)
Turntable speeds:	33-1/3 rpm and 45 rpm
Starting torque:	1.5 kg - cm (1.3 lb - in)
Build-up characteristics:	0.7 s. from standstill to 33-1/3 rpm
Braking system:	Electronic brake
Wow and flutter:	0.31% WRMS*
	0.025% WRMS (JIS C5521)
	± 0.0035% peak (IEC 98A Weighted)

* This rating refers to turntable assembly alone, excluding effects of record, cartridge or tonearm, but including motor. Measured by obtaining signal from built-in frequency generator of motor assembly.

Rumble:	−56 dB (IEC 98A Unweighted)
	−78 dB (IEC 98A Weighted)

Matsushita Engineering and Service Company
50 Meadowland Parkway,
Secaucus, New Jersey 07094

Panasonic Hawaii Inc.
91-238 Kauhi St. Ste 2007
P.O. Box 774
Honolulu, Hawaii 96809-5774

Matsushita Electric of Canada Limited
5770 Ambler Drive, Mississauga,
Ontario L4W 2T3

Panasonic Sales Company
Division of Matsushita Electric of Puerto Rico Inc.
Ave. 65 De Infantería, Km 9.7
Industrial Park
Carolina, Puerto Rico 00630

Technics

Panasonic Tokyo
Matsushita Electric Industrial Co., Ltd.
1-2, 1-chome, Shibaura, Minato-ku, Tokyo 105 Japan

Matsushita Electric Trading Co., Ltd.
P.O. Box 200, Central Osaka Japan

Ltd.Nr. 1845

SL-1200MK2/1210MK2

■ Tonearm section

Type:	Universal
Effective length:	230 mm (9-1/16")
Arm height adjustment range:	0 – 5 mm
Overhang:	13 mm (13/32")
Effective mass:	12 g (without cartridge)
Offset angle:	22°
Friction:	Less than 7 mN (lateral, vertical)
Tracking error angle:	Within 2°32' at the outer groove of 30 cm (12") record Within 0°32' at the inner groove of 30 cm (12") record
Stylus pressure adjustment range:	0 – 2.5 g
Applicable cartridge weight range:	5 – 10 g (13.6 – 17.5 g (including headshell)
(with auxiliary weight):	9.8 – 13 g (17 – 20.6 g (including headshell)
(with shell weight):	3.5 – 6.5 g (11 – 14 g (including headshell)
Headshell weight:	7.5 g

Notes

- ★ To improve the performance of SL-1200MK2/1210MK2, the bottom structure and circuit are changed in the course of production.
- ★ After the change, SL1200MK2–A/1210MK2–A is indicated in the name plate as the model of the set. It is discriminated from before-change set by –A. Also, check that the present change is of the sets after the change mark D shown in the sirial No. sheet attached to the bottom and carton box.
- ★ This supplement service manual contains the bottom plate disassembly procedure, change part No., circuit diagram, P.C.B. and block diagrams. The other contents are the same as for the service manual of SL-1200MK2/1210MK2 already issued.
- ★ Sets with cartridge (EPC-207C) are included in those for same areas.
- ★ Since the power transformer fitting method is different for sets with serial number sheet change mark E, refer to the development plan on page 8.

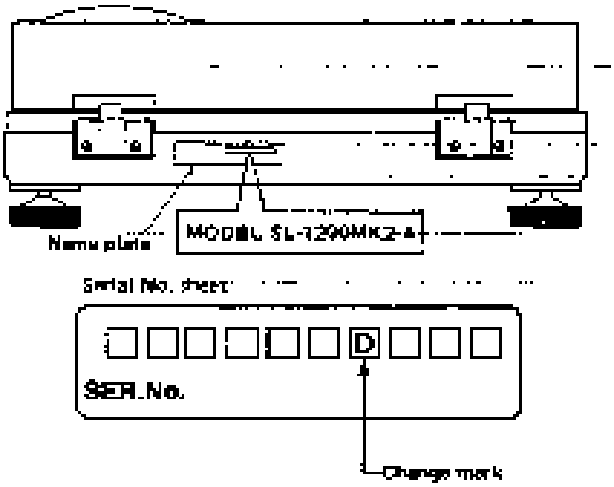

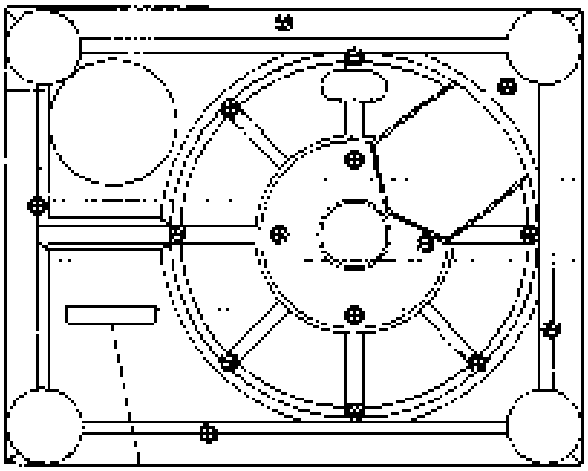

Deutsch

TECHNISCHE DATEN

Änderungen der technischen Daten vorgehalten
Die angegebenen Gewichts- und Abmessungsdaten sind ungefähre Werte.

■ Allgemeine Daten

Stromversorgung:	~110-120/220-240 V, 50/60 Hz Wechselstrom
Leistungsaufnahme:	13.5 W
Abmessungen: (B × H × T):	45.3 × 15.2 × 28 cm
Gewicht:	12.5 kg
Plattenteller-Drehzahlen:	33-1/3 und 45 U/min
Anlaufdrehmoment:	1.5 kg · cm
Drehzahl-Hochlaufzeit:	0.7 s vom Stillstand auf 33-1/3 U/min
Bremssystem:	Elektronische Bremse
Gleichlaufschwankungen:	0.01% WRMS * 0.025% WRMS (JIS C5521) ± 0.035% Spitze (IEC 98A bewertet)

* Diese Nennleistung bezieht sich auf das Laufwerk-Baugruppe allein, ausschließlich Einfluss von Schallplatte, Tonabnehmer oder Tonarm, aber einschließlich Plattenteller.
Gemessen unter von Signalen vom eingebauten Frequenzgenerator des Motorsteuerkreises.

■ Plattenspieler

Typ:	Manueller Quarz-Direktantrieb-Plattenspieler
Antrieb:	Direktantrieb
Motor:	Kollektorloser Gleichstrommotor
Plattenteller:	Aluminium-Spritzguß Durchmesser 33.2 cm Gewicht 2 kg
Rumpel-Geräusch-spannungsabstand:	–55 dB (IEC 98A unbewertet) –78 dB (IEC 98A bewertet)

Tonarm

Typ:	Universal Tonarm.
Effektive Länge:	230 mm
Tonarmhöhe-Einstellbereich:	0 – 6 mm
Überhang:	15 mm
Effektive Masse:	12 g (ohne Tonabnehmer)
Spurfehlwinkel:	2°32' bei der Einsetzrille einer 30 cm-Platte 0°32' bei der Auslaufrille einer 30 cm-Platte
Krümmungswinkel:	22°
Lagerreibung:	Weniger als 7 mg (horizontal, vertikal)
Auflagekraft-Einstellbereich:	0 – 2,5 g
Zulässiger Tonabnehmer-Gewichtsbereich:	6 – 10 g 13,5 – 17 g (einschließlich Tonarmkopf)
mit Zusatz-Gegengewicht):	9,5 – 13 g 17 – 20,5 g (einschließlich Tonarmkopf)
Gewichtsbereich:	3,5 – 6,5 g
mit Zusatzgewicht)	11 – 14 g (einschließlich Tonarmkopf)
Tonarmkopf-Gewicht:	7,5 g

Français

CARACTERISTIQUES

Les spécifications sont susceptibles d'être modifiées sans préavis.
Le poids et les dimensions donnés sont approximatifs

Généralités

Alimentation:	Alternatif 110-120/220-240 V, 50 ou 60 Hz
Consommation:	13,5 W
Dimensions: (L x H x P)	40,2 x 16,2 x 36 cm
Poids:	12,5 kg

Platine de lecture

Type:	Entraînement direct à quartz Platine motorisée
Système d'entraînement:	Entraînement direct
Moteur:	Moteur C.C. sans balai
Plateau de lecture:	Aluminium moulé sous pression Diamètre 33,2 cm Poids 2 kg
Vitesses de rotation:	33-1/3 et 45 t/p.m.
Couple de démarrage:	1,5 kg · cm
Caractéristiques d'augmentation:	0,7 s. (rotation de 90°) à 33-1/3 t/p.m.
Système de freinage:	Frein électronique
Pleurage et scintillement:	0,0 % de valeur efficace* 0,025% de valeur efficace (JIS C5532) ± 0,25% de crête (IEC 98A Pondéré)

*Ce régime nominal se rapporte à l'ensemble du tourne-disque seul, excluant les effets du disque, de la cellule pick-up ou de bras de lecture, mais comprenant le plateau.
Mesuré par l'obtention d'un signal provenant du générateur de fréquences incorporé de l'ensemble du moteur.

Ronflement:	–56 dB (IEC 98A Non pondéré) –79 dB (IEC 98A Pondéré)

Bras de lecture

Type:	Bras de lecture universel
Longueur effective:	230 mm
Portée du réglage de la hauteur du bras:	0 – 6 mm
Porte-à-faux:	15 mm
Masse réelle:	12 g (sans la cellule pick-up)
Angle d'erreur de piste:	En deçà de 2°32' sur le bord extérieur d'un disque de 30 cm En deçà de 0°32' sur le bord intérieur d'un disque de 30 cm
Angle de décalage:	22°
Frottement:	Moins de 7 mg (latéral et vertical)
Plage de réglage de la pression d'appui:	0 – 2,5 g
Gamme du poids de la cellule pick-up utilisable:	6 – 10 g 13,5 – 17,5 g (y compris la coque porte-cellule)
(avec contrepoids inutilisé):	9,5 – 13 g 17 – 20,5 g (y compris la coque porte-cellule)
(avec contrepoids de la cellule):	3,5 – 6,5 g 11 – 14 g (y compris la coque porte-cellule)
Poids de la cellule:	7,5 g

Español

ESPECIFICACIONES

Las especificaciones quedan sujetas a cambios sin aviso previo.
El peso y las dimensiones indicados son aproximados.

■ En general

Alimentación de corriente:	~ 110-120/220-240 V, 50 a 60 Hz
Consumo de corriente:	13,5 W
Dimensiones: (Ancho x Alto x Prof.)	45,3 x 16,2 x 36 cm
Peso:	12,5 kg

■ Sección del plato giratorio

Tipo:	Plato giratorio manual de accionamiento directo por cuarzo
Método de accionamiento:	Accionamiento directo
Motor:	Motor de corriente continua sin escobillas
Platillo del plato giratorio:	Aluminio fundido Diámetro 33,2 cm Peso 2 kg
Velocidades del plato giratorio:	33-1/3 y 45 rpm
Par motor de arranque:	1,5 kg · cm
Características de establecimiento:	0,7 s (a partir de reposo) hasta 33-1/3 rpm
Sistema de frenado:	Freno electrónico
Wuiseiosos y trémolo:	0,025% WRMS* 0,025% WRMS (JIS C5521) = 0,055% pico (IEC 98A Ponderado)

*Estas características se refieren únicamente al conjunto de plato giratorio, con exclusión de los efectos anteriores del disco, cartucho o del brazo sonoro, incluyendo, empero, el platillo. La medida fue tomada por medio de la salida obtenida del generador de frecuencia incorporado del conjunto del motor.

Ruido de rodadura:	−58 dB (IEC 98A No Ponderado) −78 dB (IEC 98A Ponderado)

■ Sección del brazo sonoro

Tipo:	Brazo sonoro universal
Longitud efectiva:	230 mm
Radio de ajuste de altura del brazo:	0 — 8 mm
Parte saliente:	15 mm
Masa efectiva:	12 g (sin cartucho)
Ángulo de descentramiento:	22°
Fricción:	Menos de 7 mg. (en sentido lateral y vertical)
Ángulo de error de seguimiento:	Inferior a 2°32' en el surco exterior de un disco de 30 cm Inferior a 0°52' en el surco interior de un disco de 30 cm
Rango de ajuste de la presión de la aguja:	0 a 2,5 g.
Rango de peso de cartucho utilizable:	6 a 10 g. 13,5 a 17,5 g. (incluyendo la cápsula de la cabeza)
(con contrapeso de balance de interior):	9,5 a 13 g. 17 a 20,5 g. (incluyendo la cápsula de la cabeza)
(con contrapeso de la cápsula):	3,5 a 6,5 g. 11 a 14 g. (incluyendo la cápsula de la cabeza)
Peso de la cápsula de la cabeza:	7,5 g

CHANGES

■ DISASSEMBLY INSTRUCTIONS

- **How to remove the bottom cover and bottom base.**

1. Remove the turntable mat and turntable.
2. Turn over the body on a soft cloth (taking care not to damage the dust cover).
3. Remove the insulators and the 21 setscrews (**Fig. 1** : ❶,❷,❸) of the bottom cover.
4. Remove the 6 setscrews (**Fig. 2** : ❹) of the bottom base.

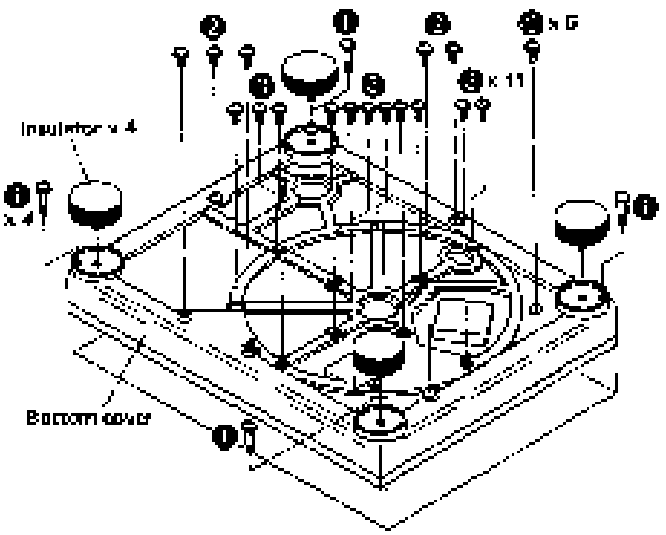

Fig. 1

Supplement

- **How to remove the hinge case**

1. Remove the bottom cover. (Refer to "How to remove the bottom cover".)
2. Remove the 4 setscrews (Fig. 2 : ❶) of the hinge case bracket.
3. Remove the 4 setscrews (Fig. 2 : ❷) of the hinge case.

Note: The other disassembly procedure are the same as for before-change sets.

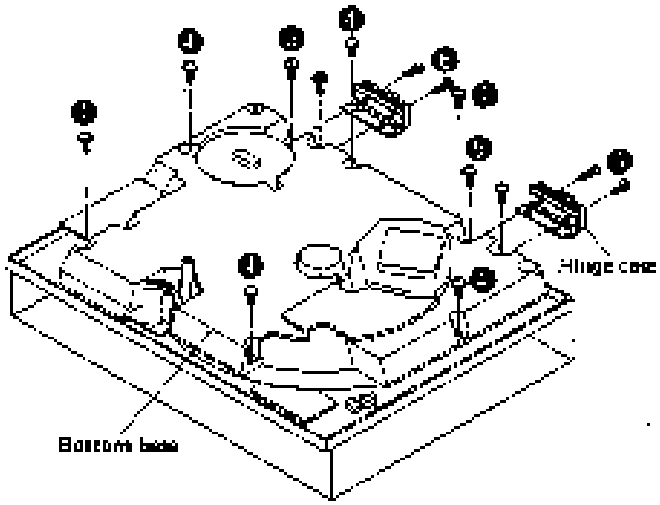

Fig. 2

■ REPLACEMENT PARTS LIST

Notes:

1. This parts list mentions only the difference between before and after change of SL-1200MK2/1210MK2.
2. ⊗-marked parts are used only for SL-1210MK2 (black type). And ○-marked parts are used for SL1200MK2 (silver type).
3. Parts other than ⊗- and ○-marked are used for both SL-1210MK2 and SL-1200MK2.
4. The "⊗" mark is service standard parts and may differ from production parts.

Areas

- * [M] is available in the U.S.A.
- * [MC] is available in Canada.
- * [E] is available in Switzerland and Scandinavia.
- * [EK] is available in United Kingdom.
- * [XL] is available in Australia.
- * [EG] is available in F.R. Germany.
- * [EB] is available in Belgium.
- * [EH] is available in Holland.
- * [EF] is available in France.
- * [EI] is available in Italy.
- * [XA] is available in Southeast Asia, Oceania, Africa, Middle Near East and Central South America.
- * [PA] is available in far East FX.
- * [PE] is available in European Military.
- * [PC] is available in European Audio Club.

Ref. No.	Change of Part No. SL-1200MK2 (Before Change)	→ SL-1200MK2/1210MK2 (After Change)	Part Name & Description	Per Set (Pcs.)	Remarks
INTEGRATED CIRCUIT					
IC302	SVITC4011BP	MN4011B	NAND Gate	1	
TRANSISTOR					
Q1	2SD386A—Q	2SD1266	Regulator	1	
DIODES					
D1	SVDS1RBA40	SVDS1RBA20Z	Rectifier	1	△
D201, 202	SVDSR—105C	SVDPR50025—9	Speed Indicator	2	
D203 ~ 206	SVDE3R55DS	SVDSL-154VT3	Strobe	4	
D401	SVDGL—9PB2	SVDGL—9NG2	Pitch Indicator	1	
CRYSTAL					
X201	SVQU306115	SVQM8X199	4.193 MHz, Oscillator	1	
VARIABLE RESISTORS					
VR301	EVMH2GA00B52	EVMH1GA00B23	Pitch Control Adjustment, 2kΩ (B)	1	
VR303	EVBJ05C19ABE	SFDZ122N11	Pitch Control	1	
SWITCHES					
S203	SFDS556GL13C	SFDS501GL13	Start/Stop	1	
S601	SFDS556GL13S	SFDS556GL12P	Power	1	△
TRANSFORMER					
T1	SLT60EU79	SLT68DTL5A [MI]	Power Source	1	△
T1	SLT60F31C	SLT68DT14C [MC]	Power Source	1	△
T1	SLTF6600	SLT68DTE1SA [Other areas]	Power Source	1	△

Ref. No.	Change of Part No. SL-1200MK2 (Before Change)	→ SL-1200MK2/1210MK2 (After Change)	Part Name & Description	Per Set (Pcs.)	Remarks
RESISTORS					
R4	ERD25FJ561	ERD25FJ471	Carbon, 1/4W, 470Ω	1	Ⓢ
R209	ERD25TJ154	ERD25TJ334	Carbon, 1/4W, 330kΩ	1	Ⓢ
R211	ERD25FJ103	ERD25FJ472	Carbon, 1/4W, 4.7kΩ	1	Ⓢ
R212	ERD25FJ121	ERD25FJ151	Carbon, 1/4W, 150Ω	1	Ⓢ
R222	Addition	ERD25FJ391	Carbon, 1/4W, 390Ω	1	Ⓢ
R301	ERD25CKF3303	ERD25CKF2701	Metal Film, 1/4W, 2.7kΩ	1	Ⓢ
R304	ERD25FJ152	ERD25FJ561	Carbon, 1/4W, 560Ω	1	Ⓢ
R401	Addition	ERD50FJ152	Carbon, 1/2W, 1.5kΩ	1	Ⓢ
R801	ERD25FJ4R7	ERD50FJ4R7	Carbon, 1/2W, 4.7Ω	1	△ Ⓢ
CAPACITORS					
C5, 8	Addition	ECQM1223KZ	Polyester, 125V, 0.022μF	1	△
C104 ~ 107	ECQM1H104KZ	ECQM1H104JZ	Polyester, 50V, 0.1μF	4	Ⓢ
C108, 110	ECQM1H104KZ	ECQM1H104JZ	Polyester, 50V, 0.1μF	2	Ⓢ
C111	ECQM1H562KZ	ECQM1H562JZ	Polyester, 50V, 0.0056μF	1	Ⓢ
C204	ECQM1H473KZ	ECQM1H473JZ	Polyester, 50V, 0.047μF	1	Ⓢ
C210	ECQM1H224KZ	ECQM1H224JZ	Polyester, 50V, 0.22μF	1	Ⓢ
C211	ECQM1H473KZ	ECQM1H473JZ	Polyester, 50V, 0.047μF	1	Ⓢ
C217 ~ 219	Addition	ECKD1H104ZF	Ceramic, 50V, 0.1μF	1	Ⓢ
C301	ECQK1123FZ	ECQK1323GZ	Polyester, 125V, 0.032μF	1	
C302	ECQK1123FZ	ECQK1682GZ	Polyester, 125V, 0.0068μF	1	
C306	ECQM1H122KZ	ECQM1H122JZ	Polyester, 50V, 0.0012μF	1	Ⓢ
CABINET and CHASSIS PARTS					
9	SFUP122-12	Deletion		0	
10	SFAC122-01	SFAC122-01	Cabinet (Silver)	1	○
		SFAC1248G1	Cabinet (Black)	1	Ⓡ
35	SFXB122-02	SFXB122-08	Base, Drive	1	
33	SFQA001-02	SFQA122-03	Spring	1	
36	SFUP025-01	SFUP122-16 [M, MC, PA, PE, PC]	Bracket, AC Cord	1	
	SFUP028X01	SFUP122X01 [Other areas]	Bracket, AC cord	1	
38	SFUP132-03	SFGC122-03	Cushion	2	
40	SFUP122-10	Deletion		0	
42	SFKK122-03	SFKK122-03	Plate (Silver)	1	
		SFKK1249G1	Plate (Black)	1	
48	SFAU122-01	SFAU122-02	Bottom Base	1	
48-1	Addition	SFAU122-03	Bottom Cover	1	
49	SFUP122-06	SFUP122-33	Supporter (A), Hinge	2	
50	SFUP122-04	SFUP122-34	Supporter (B), Hinge	2	
51	SFUM170-07	SFUMM02N04	Cover, Hinge	2	
55	SFNN122M01	SFNN122M10 [M]	Name Plate	1	○
	SFNN122C01	SFNN122C10 [MC]	Name Plate	1	○
	SFNN122E01	SFNN122E10 [E]	Name Plate	1	○
	SFNN122L01	SFNN122G10 [EK, XL]	Name Plate	1	○
	SFNN122X01	SFNN122X10 [XA]	Name Plate	1	○
	Addition	SFNN122P10 [PA, PE]	Name Plate	1	○
	Addition	SFNN122P11 [PC]	Name Plate	1	○
	SFNN122N01	SFNN122N10 [Other areas]	Name Plate	1	○
	Addition	SFNN1248C0 [C]	Name Plate	1	Ⓡ
	Addition	SFNN1240C0 [EG, CH]	Name Plate	1	Ⓡ
56	SFXD122-01	Deletion		0	
57	SFXD122-02	Deletion		0	
58	SFAT122-01A	SFATMC2N01A	Hinge	1	

Ref. No.	Change of Part No. SL-1200MK2 (Before Change)	→ SL-1200MK2/1210MK2 (After Change)	Part Name & Description	Per Set (Pcs.)	Remarks
TONEARM PARTS					
82	SFPAM18201K	SFPAM18201K	Tonearm Assy (Silver)	1	○
		SFPAM18202K	Tonearm Assy (Black)	1	Ⓚ
78	SFPKB17201S	SFPKB17204E	Ring, Arm Base Operation	1	
92	SFGK132-01	SFGK132-01	Cap (Silver)	1	○
		SFGK138S01	Cap (Black)	1	Ⓚ
ACCESSORIES					
A1	SFNU122M01	SFNU122M06 [M]	Instruction Book	1	
	SFNU122C01	SFNU122C06	Instruction Book	1	
	SFNU122E01	SFNU122E01 [E]	Instruction Book	1	
	SFNU122G01	SFNU122G01 [EK]	Instruction Book	1	
	Addition	SFNU122P01 [PA, PL, PG]	Instruction Book	1	
	SFNU122X01	SFNU122X01 [Other areas]	Instruction Book	1	
A2	SFWE210	SFWE122-01	45 Adaptor	1	
PACKING PARTS					
P1	SFHP122C01	SFHP122C02 [MC, EF]	Carton Box (Silver)	1	○
	SFHP122M01	SFHP122M02 [Other areas]	Carton Box (Silver)	1	○
		SFHP121S02	Carton Box (Black)	1	Ⓚ
P5	Addition	SPB1082	Polyethylene Bag, Accessories	2	
P12	Addition	SPU15	Polyethylene Bag, Shell Weight	1	
P11	Addition	SFHZ002M01	Polyethylene Bag, Dust Cover	3	
P12	Addition	SFHZ122-01	Polyethylene Bag, 45 Adaptor	1	
P13	Addition	SPP1[illegible]	Polyethylene Bag, Cords	2	

■ ADJUSTMENT POINTS

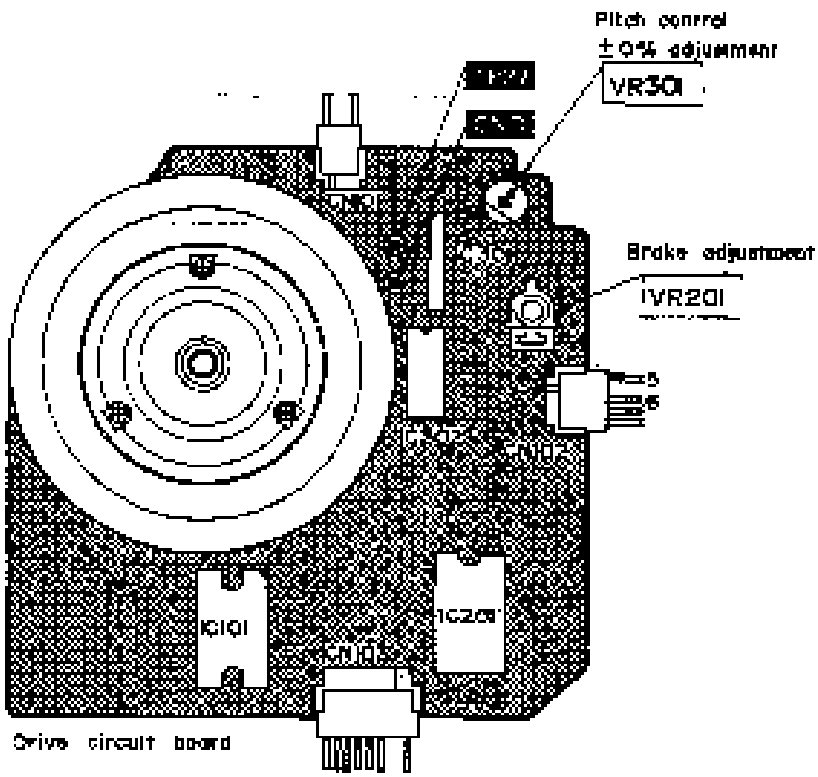

Fig. 3 (Abb. 3)

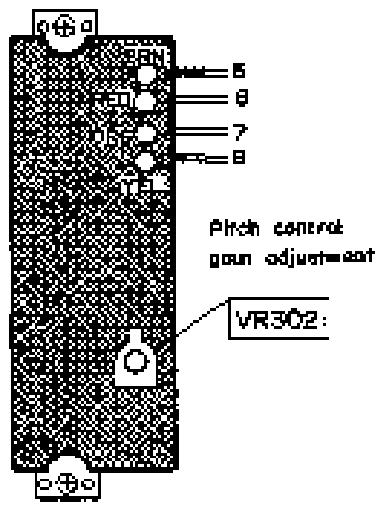

Fig. 4 (Abb. 4)

■ MEASUREMENTS AND ADJUSTMENTS — English

- **Conditions of set, and instruments used**

1. Remove the panel cover.
2. Remove the bottom cover (when adjusting the pitch control gain).
3. Frequency counter
4. Tester

	Adjustment	Connection	Parts adjusted	Procedure
1	Pitch control ± 0% adjustment	Frequency counter (+) — TP27 (−) — Earth point	VR301 (Fig. 3)	1. Connect the frequency counter and turn the power supply ON. 2. Set the pitch control knob to "0". (Indicator lights up.) 3. Adjust VR301 so that the frequency is 262.09 kHz ± 0.05 kHz.
2	Pitch control gain adjustment	Tester (−) — CN102 terminal Ⓐ (+) — CN102 terminal Ⓑ	VR302 (Fig. 4)	1. Set the pitch control knob to "0". 2. Pull out the connector CN102 of drive P.C.B. 3. Connect the tester to terminals Ⓐ and Ⓑ of connector CN102 on the pitch control P.C.B. side. 4. Adjust VR302 so that the resistance value of the tester is 2.7 kΩ ± 0.1 kΩ.
3	Brake adjustment	———	VR201 (Fig. 3)	1. Adjust VR201 so that the rotation at 33 r.p.m. stops within the angle of 90° ~ 120° after depressing the stop button.

■ MESSUNGEN UND JUSTIERUNGEN — Deutsch

- **Zustand des Gerätes und zu verwendende Instrumente**

1. Die Abdeckplatte entfernen.
2. Die Bodenabdeckung entfernen (wenn die Drehzahlregelungs-Verstärkung justiert werden soll).
3. Frequenzzähler
4. Prüfgerät

	Justierung	Anschlüsse	Zu justierender Teile	Vorgehen
1	± 0%-Justierung des Drehzahlreglers	Frequenzzähler (+) — TP27 (−) — Massepunkt	VR301 (Abb. 3)	1. Frequenzzähler anschließen und Netzschalter einschalten. 2. Drehzahlreglerknopf auf "0" stellen. (Anzeige leuchtet auf.) 3. VR301 so justieren, daß die Frequenz 262,09 kHz ± 0,05 kHz beträgt.
2	Justierung der Drehzahlregelungs-Verstärkung	Prüfgerät (+) — CN102 Anschluß Ⓐ (−) — CN102 Anschluß Ⓑ	VR302 (Abb. 4)	1. Den Drehzahlreglerknopf auf "0" einstellen. 2. Steckverbindung CN102 von der Antriebsplatine herausziehen. 3. Prüfgerät an Anschlüsse Ⓐ und Ⓑ der Steckverbindung CN102 auf der Drehzahlregelseite der Platine anschließen. 4. VR302 so justieren, daß der Widerstandswert des Prüfgerätes 2,7 kΩ ± 0,1 kΩ beträgt.
3	Bremsjustierung	———	VR201 (Abb. 3)	1. VR201 so justieren, daß die Rotation bei 33 UPM innerhalb 90° ~ 120° nach Drücken der Stop-Taste stoppt.

■ MESURAGES ET RÉGLAGES — Français

- **Conditions de l'appareil et appareils utilisés.**

1. Retirer le panneau de protection.
2. Retirer le panneau de protection inférieur (lors de l'ajustement de l'amplification du réglage d'écart).
3. Compteur de fréquence
4. Appareil contrôleur

	Mise au point	Raccordement	Elements à régler	Marche à suivre
1	Ajustement de ± 0% du réglage d'écart	Compteur de fréquence (+) — TP27 (−) — Point de contact à la terre	VR301 (Fig. 3)	1. Raccorder le compteur de fréquence et mettre en marche l'alimentation. 2. Régler le bouton du réglage d'écart sur "0". (L'indicateur s'éclairera.) 3. Ajuster VR301 de telle sorte que la fréquence soit de 262,08 kHz ± 0,05 kHz.
2	Ajustement de l'amplification du réglage d'écart	Appareil contrôleur (+) — Borne CN102 ⑤ (−) — Borne CN102 ⑥	VR302 (Fig. 4)	1. Régler le bouton de réglage d'écart sur "0". 2. Retirer le connecteur CN102 de la plaquette à circuits imprimés de commande. 3. Raccorder l'appareil contrôleur aux bornes ⑤ et ⑥ du connecteur CN102 sur le côté de la plaquette à circuits imprimés du réglage d'écart. 4. Ajuster VR302 de telle sorte que la valeur de résistance de l'appareil contrôleur soit de 2,7 kΩ ± 0,1 kΩ.
3	Ajustement du frein	———	VR201 (Fig. 3)	1. Régler VR201 de telle sorte que la rotation à 33 t/p.m. s'arrête en deçà d'un angle de 90° ~ 120° après avoir appuyé sur la touche d'arrêt.

■ MEDICIONES Y AJUSTE — Español

- **Condiciones de aparato e instrumentos usados**

1. Remover la cubierta del panel.
2. Remover la cubierta inferior (al ajustar la ganancia de control de altura de los sonidos).
3. Contador de frecuencia
4. Probador

	Ajuste	Conexión	Piezas ajustadas	Procedimiento
1	Ajuste ± 0% de control de altura	Contador de frecuencia (+) — TP27 (−) — Punto de tierra	VR301 (Fig. 3)	1. Conectar el contador de frecuencia y prender la fuente de alimentación. 2. Ajustar la perilla de control de altura de sonidos a "0". (El indicador se iluminará.) 3. Ajustar VR301 de manera que la frecuencia sea 262,08 kHz ± 0,05 kHz.
2	Ajuste de ganancia de control de altura	Probador (+) — Terminal de CN102 ⑤ (−) — Terminal de CN102 ⑥	VR302 (Fig. 4)	1. Poner el control de altura de sonidos en "0". 2. Sacar el conector CN102 de T.C.I. de accionamiento. 3. Conectar el probador a terminales ⑤ y ⑥ de conector CN102 del lado de T.C.I. de control de altura. 4. Ajustar VR302 de manera que el valor de resistencia del probador sea 2,7 kΩ ± 0,1 kΩ.
3	Ajuste de freno	———	VR201 (Fig. 3)	1. Ajustar VR201 de manera que la rotación a 33 r.p.m. se pare dentro del ángulo de 90° ~ 120° después oprimir el botón de parada

■ RESISTORS AND CAPACITORS

Notes:
1. Part numbers are indicated on most mechanical parts. Please use this part number for parts orders.
2. Important safety notice: Components identified by ⚠ mark have special characteristics important for safety. When replacing any of these components use only manufacturer's specified parts.
3. The "Ⓢ" mark in service standard parts and may differ from production parts.
4. Bracketed indications in Ref. No. column specify the area. Parts without these indications can be used for all area.
5. The unit of resistance is Ω (ohm). K = 1000Ω, M = 1000kΩ
6. The unit capacitance is μF (microfarad). P = 10^{-6} μF

Areas

- * [M] is available in the U.S.A.
- * [MC] is available in Canada.
- * [E] is available in Switzerland and Scandinavia.
- * [EK] is available in United Kingdom.
- * [XL] is available in Australia.
- * [EG] is available in F.R. Germany.
- * [EB] is available in Belgium.
- * [EH] is available in Holland.
- * [EF] is available in France.
- * [EI] is available in Italy.
- * [XA] is available in Southeast Asia, Oceania, Africa, Middle New East and Central South America.
- * [PA] is available in for East PX.
- * [PE] is available in European Military.
- * [PC] is available in European Audio Club.

Numbering System of Resistor

Example

ERD	25	F	J	101
Type	Wattage	Shape	Tolerance	Value
ERX	2	AN	J	2R2
Type	Wattage	Shape	Tolerance	Value

Resistor type	Wattage	Tolerance
ERD: Carbon	25 : 1/4W	F : ±1%
ERG: Metal Oxide	50 : 1/2W	J : ±5%
ERD: Metal Film	1A : 1W	
ERX : Metal Film	2A : 2W	

Numbering System of Capacitor

Example

ECKD	1H	102	Z	F
Type	Voltage	Value	Tolerance	Peculiarity
ECEA	50	M	R47	R
Type	Voltage	Peculiarity	Value	Special use

Capacitor Type		Voltage		Tolerance
ECEA	: Electrolytic	0J	: 6.3V	J : ±5%
ECEB	: Electrolytic	1C	: 16V	K : ±10%
ECCD	: Ceramic	1E	: 25V	M : ±20%
ECQM	: Polyester	1H	: 50V	Z : +80% −20%
ECQU	: Polyester	1	: 100V	
ECQF	: Polyester	1A	: 125V	
ECNC	: Polyester	4A	: 400V	

Ref. No.		Part No.	Value
RESISTORS			
R1	Ⓢ	ERD25FJ562	5.6K
R2	Ⓢ	ERD25FJ682	6.8K
R3	Ⓢ	ERD25FJ272	2.7K
R4,5	Ⓢ	ERD25FJ471	470
R101	Ⓢ	ERD25FJ103	10K
R102	Ⓢ	ERD14MJ4R7	4.7
R103	Ⓢ	ERD25FJ472	4.7K
R104	Ⓢ	ERD25FJ472	4.7K
R105	Ⓢ	ERD25FJ103	10K
R106	Ⓢ	ERD25FJ100	10
R107	Ⓢ	ERD14MJ1R5	1.5
R108	Ⓢ	ERD25FJ103	10K
R109,110	Ⓢ	ERD14MJ4R7	4.7
R201	Ⓢ	ERD14MJ561	560
R202	Ⓢ	ERD25FJ103	10K
R203	Ⓢ	ERD25FJ470	47
R204	Ⓢ	ERD25FJ272	2.7K
R205	Ⓢ	ERD25FJ124	120K
R206	Ⓢ	ERD25FJ183	18K
R207	Ⓢ	ERD25FJ563	56K
R208	Ⓢ	ERD25FJ224	220K
R209	Ⓢ	ERD25FJ334	330K
R210	Ⓢ	ERD25FJ163	16K
R211	Ⓢ	ERD25FJ472	4.7K
R212	Ⓢ	ERD25FJ161	160
R213	Ⓢ	ERD25FJ152	1.5K
R214	Ⓢ	ERD25FJ223	22K
R215	Ⓢ	ERD25FJ472	4.7K
R216	Ⓢ	ERD25FJ154	150K
R217	Ⓢ	ERD25FJ223	22K
R218	Ⓢ	ERD25FJ102	1K
R219	Ⓢ	ERD25FJ332	3.3K
R220	Ⓢ	ERD25FJ221	220
R221	Ⓢ	ERD25FJ471	470
R222	Ⓢ	ERD25FJ331	330
R301	Ⓢ	ERD25FKR27J	0.27
R302	Ⓢ	ERD25FJ471	470
R303	Ⓢ	ERD25FJ825	8.2K
R304	Ⓢ	ERD25FJ681	680
R305	Ⓢ	ERD25FJ181	180
R306	Ⓢ	ERD25FJ223	22K
R307	Ⓢ	ERD25FJ272	2.7K
R401	⚠ Ⓢ	ERD25FJ152	1.5K
R211	⚠ Ⓢ	ERD25FJ4R7	4.7
CAPACITORS			
C1		ECEE1HU470	470
C2		ECEA1EU330	33
C3		ECEA1EU220	22
C5,6		ECQM1333MZ	0.033
C101,102		ECEA1EU330	33
C103		ECEA1EU330	33
C104,105	Ⓢ	ECQM1H104JZ	0.1
C106,107	Ⓢ	ECQM1H104JZ	0.1
C108		ECEA1EU101	100
C109,110	Ⓢ	ECQM1H104JZ	0.1
C111	Ⓢ	ECQM1H683JZ	0.068
C112		ECEA1HU4R7	4.7
C201		ECEA1CU330	33
C202,203		ECEA1HU010	1
C204	Ⓢ	ECQM1H473JZ	0.047
C205		ECEA4JU221	220
C206		ECEA1HU010	1
C207	Ⓢ	ECCD1H101K	100P
C208	Ⓢ	ECCD1H220K	22P
C209		ECEA1CU100	10
C210	Ⓢ	ECQM1H224JZ	0.22
C211	Ⓢ	ECQM1H473JZ	0.047
C212		ECEA1HU3R3	3.3
C213	Ⓢ	ECCD1H471K	470P
C214		ECEA1CU101	100
C215		ECEA1HU010	1
C216		ECEA1CU470	47
C217,218		ECKD1H104KF	0.1
C219		ECKD1H104KF	0.1
C301		ECQK4332KZ	0.033
C302		ECQK4152KZ	0.0015
C303		ECEA1HU010	1
C304		ECEA1CU100	10
C305	Ⓢ	ECQM1H123JZ	0.012
C306		ECEA1HU010	1
C401(M)	⚠	ECQM1A473MZ	0.047
C401(MC)	⚠	ECQU1A473MS	0.047
C401(Other areas)	⚠	ECQM1A473MZ	0.047

■ REPLACEMENT PARTS LIST

Notes:
1. Part numbers are indicated on most mechanical parts. Please use this part number for parts orders.
2. Important safety notice: Components identified by ⚠ mark have special characteristics important for safety. When replacing any of these components use only manufacturer's specified parts.
3. Bracketed indications in Ref. No. column specify the area. Parts without these indications can be used for all areas.
4. The "(S)" mark is service standard parts and may differ from production parts.
5. The parenthesized numbers in the column of description stand for the quantity per set.
6. Ⓚ-marked parts are used only for SL-1210MK2 (black type). And Ⓢ-marked parts are used for SL-1200MK2 (silver type).
7. Parts other than Ⓚ and Ⓢ marked are used for both SL-1210MK2 and SL-1200MK2.

Areas

- * [M] is available in the U.S.A.
- * [MC] is available in Canada.
- * [E] is available in Switzerland and Scandinavia.
- * [EK] is available in United Kingdom.
- * [XL] is available in Australia.
- * [EG] is available in F.R. Germany.
- * [EB] is available in Belgium.
- * [EH] is available in Holland.
- * [EF] is available in France.
- * [EI] is available in Italy.
- * [XA] is available in Southeast Asia, Oceania, Africa, Middle Near East and Central South America.
- * [PA] is available in Far East PX.
- * [PE] is available in European Military.
- * [PC] is available in European Audio Club.

Ref. No.	Part No.	Description
INTEGRATED CIRCUITS		
IC101	AN6675	Turntable Drive
IC201	AN6680	Turntable Control
IC301	AN6682	Pitch Control
IC302	MN4011B	NAND Gate
TRANSISTORS		
Q1	2SD1363	Regulator
Q2,3	2SD667	Regulator
Q201 Ⓚ	2SC1845-R	Regulator
Q202	2SD667	LED Driver
Q203 Ⓚ	2SC1222-T	FG Amp.
DIODES		
D1 ⚠	SVDB-RBA352	Rectifier
D2	MA1081 *	6.1V Zener
D201,202	SVDPR3M035-3	Speed Indicator
D203~208	SVD8LH64VT9	Strobe
D204,K	MA152A	Switching
D301	MA1051	6.1V Zener
D401	SVDGL-3N251	Pitch Indicator

Ref. No.	Part No.	Description
CRYSTAL		
X301	SVDN54433	4.193304MHz Oscillator
VARIABLE RESISTORS		
VR101 Ⓚ	EVT33M00B54	Brake Adjustment(MAIN)
VR201	EVM11GA00B23	Pitch Correction Adjustment(SUB)
VR202 Ⓢ	EVT33M00B64	Pitch Correction Adjustment(SUB)
VR301	SFD2103N11	Pitch Control
SWITCHES		
S201,202	EVQPE1M1K	Speed Selector
S203	STD2S50HGL10	Start/Stop
S401	SFD4C2W3L-G	Strobe Multimeter
S501 ⚠	SFD2S66GL13P	Power
S502 Except for (M,MC) ⚠	SFD3N0AW1317	Voltage Selector

Ref. No.	Part No.	Description
LAMP		
PL1 ⚠	SPDNH32-01	Stylus Illuminator
TRANSFORMER		
T1 (M) ⚠	SLT660T13M	Power Source
T1 (MC) ⚠	SLT660T14C	Power Source
T1 (Except M,MC) ⚠	SLT660TE13E	Power Source
FUSES		
F1 (MC) ⚠	XBA1F12RL-14	125V,1.2A
F1 (Except for (M,MC)) ⚠	XBA200H1T1A	250V,T200mA
F2 (Except for (M,MC)) ⚠	XBA250L0T1A	250V,T1A

SL-1200MK2/1210MK2

Ref. No.	Part No.	Description
CABINET AND CHASSIS PARTS		
1	SFAD122-01C	Dust Cover
2	SFTG172-01	Turntable Mat
3	SFTE072-01	Turntable Platter Ass'y
4	SFUM172-05	Cover, Cabinet
5	SFMG020-01	Cover, Drive Coil
6	SFMG520-01A	Drive Coil Ass'y
7	SFMZ172-01E	FG Coil Ass'y
8	SFMZ025-01A	Shaft Ass'y, Turntable
10 ○	SFAC122-01	Cabinet (Silver)
11 ○	SFAC124S01	Cabinet (Black)
11	SFUM172-04	Ornament, Stylus Illuminator
12	SFKT122-01	Knob, Power Switch
13	SFKT122-01E	Case, Strobe Illuminator
14	SFKT016-02	Button, Start/Stop
15	SFDA122-01	Spring, Start/Stop Button
16	SFUM165-01	Base, Operation
17	SFKT016-01E	Button, Speed
18	SFDJ122-02E	Governor, 3pin
19	SFS2122-01	Spacer, Sensor
20	SFY026-02	Ball, Switch Cam
21	SFDA520-01	Spring, Switch Cam
22	SFUM122-03	Cam, Stop (Auto)
23	SFUM015-11	Spacer, Speed Indicator
24	SFKK172-01	Cover, Stylus Illuminator
25	SFW122-01	Gear, Drive
26	SFDA172-01	Spring, Drive Base
27	SFKJ172-01	Pin, Lock Changer
28	SFUP122-02E	Bracket
		Stylus Illuminator
29	SFUP122-03	Plate, Lever Operation
30	SFDJ122-03E	Connector, 3pin
31	SFKJ172-01	Pin, Guide
32	SFGA520-01	Spring, Lock Cancelar
33	SFDA122-02	Spring, Lock Operation Plate
34	SFKJ172-05	Pin, Lock Operation Plate
35(M,MC,PA,PE,PG)	SFUK044-L	Clamper, AC Cord
35(EK)	SFUK-044-4	Clamper, AC Cord
35(Other areas)	SFUK-044-4	Clamper, AC Cord
36(M,MC,PA,PE,PG)	SFUP122-16	Bracket, AC Cord
36(Other areas)	SFUP122-01	Bracket, AC Cord
37 △ (M,MC)	SJA027	AC Cord
37(EK) △	SJFC126M	AC Cord
37(U) △	SJA021	AC Cord
37 △ (PA,PE,PG)	SJA09	AC Cord
37 △ (Other areas)	SJA08	AC Cord
38	SFGC127-03	Rubber, Power Transformer
39	SFGC122-01	Cushion, Power Transformer
41	SFKT122-02	Knob, Pitch Control
42 ○	SFKK122-03	Ornament (Silver), Pitch Control
42 ○	SFKK124S01	Ornament (Black), Pitch Control
43	SFUZ122-01	Fan
44	SFUP122-09	Holder, LED
45	SFUP122-01	Bracket, Pitch Control
46	SFDJ122-01E	Connector, 4pin
48	SFAU122-02	Bottom Base
48-1	SFAU122-03	Bottom Cover
49	SFUP122-22	Supporter X, Hinge
50	SFUP122-01	Supporter R, Hinge
51	SFUW022-04	Cable, Holder

Ref. No.	Part No.	Description
52	SFKC122-02E	Insulator
54	SFKT016-02E	Button, Speed (W)
55(M) ○	SFNN122Anig.	Name Plate
55(MC) ○	SFNN122Cnig	Name Plate
55(EK) ○	SFNN122E10	Name Plate
55(EK,U,L) ○	SFNN122E10	Name Plate
55(U) ○	SFNN122E10	Name Plate
55(PA,PE) ○	SFNN122P10	Name Plate
55(PG) ○	SFNN122P11	Name Plate
55(Other areas) ○	SFNN122Anig	Name Plate
56(EK) ※	SFNN124E10	Name Plate
56 ※ (EG,EH)	SFNN124G10	Name Plate
58	SFAT002N01A	Hinge
59	SFUP122-25	Plate, Power Transformer
TONEARM PARTS		
61	SFPG021001K	Headshell
62 ○	SFPAM162001K	Tonearm Ass'y (Silver)
62 ※	SFPAM162002K	Tonearm Ass'y (Black)
65	SFPAG172001K	Balance Weight
66	SFPBT162001K	Lift Ass'y
67	SFPC017202	Knob, Arm Base Lock
68	SFQAM19-03	Spring, Lift Ass'y
69	SFPAB12202	Rack, Arm Lift
70	SFPJL162002K	Oil Damper
71	SFPB012203	Plate, Arm Base Cover
72	SFUM170-04	Spacer, Phono Cord
73	SFPB012204	Clamper, Phono Cord
74	SFPB162001K	Tonearm Fixing Plate
75	SFPC012201K	Plate
76	SFDM172-01	Phono Cord
77	SFEL022-01E	Ground Wire
78	SFPT172001K	Arm Base
79 ○	SFPKD17203	Arm Base (Silver)
79 ※	SFPKD17205	Arm Base (Black)
80	SFPKB172041E	Ring, Arm Base Operation
80	SFPKD12201	Bracket, Arm Base
81	SFPAB17203	Rack, Anti-Skating
82 ○	SFQK132-01	Cap (Silver)
82 ※	SFQK132S01	Cap (Black)
SCREW, NUT AND WASHERS		
N1 ※	XTN3+8BFZ	Screw
N2	SFXG320-02	Screw
N3 ※	XTN3+8B	Screw
N4 ※	XW31	Washer
N5 ※	XTN25+8B	Screw
N6 ※	XTN3+8BPH	Screw
N7	SFQ9172-01	Screw
N8	XTN3+6J	Screw
N9	SFXW172-03	Washer
N10	SFPEW11005	Washer
N11 ※	XWE3010	Washer
N12 ※	XW456	Washer
N13 ※	XBN3+10S	Screw
N14	SFXW510U02	Washer
N15 ※	XTN3+10E	Screw
N16 ※	XTN3+10B	Screw
N17 ※	XUC3FT	Circlip
N18	XBN17+2FZ	Screw
N19 ※	XUC3FT	Circlip
N20 ※	XUC8FZ	Circlip
N21 ※	XSN3+14S	Screw
N22	XTW17	Circlip
N23 ※	XSN3+10	Screw
N24 ※	XSN3+8S	Screw
N25 ※	XTN3+8E	Screw
N26	XTW3J+4(TFZ	Washer
N27	SFXB122-02	Screw
N28	SFXG122-01	Screw
N30	XTN3+14(FZ	Screw

Ref. No.	Part No.	Description
N31 ※	XW32FZ	Washer
N32 ※	XBN3+14BVS	Screw
N33 ※	XW33FZ	Washer
N34	SFX8825-1	Screw
N35 ※	XSN3+8S	Screw
N36 ※	XUC6FT	Circlip
N37	SFPEW17202	Screw
N38 ※	XTN3+25S	Screw
N39	SFPEW1100	Washer
N40 ※	XSN3+8BVS	Screw
N41 ※	XW34FZ	Washer
N42 ※	XSN3+12BVS	Screw
N43 ※	XW35FZ	Washer
N44	SFXW701-02	Washer
N46	SFPEW8170	Washer
N46	XTW25+5S	Screw
ACCESSORIES		
A1(M)	SFNJ122N08	Instruction Book
A1(MC)	SFNJ122C05	Instruction Book
A1(G,EG,PC)	SFNJ122E01	Instruction Book
A1(EK)	SFNJ122E01	Instruction Book
A1(PA, PE,PG)	SFNJ122P01	Instruction Book
A1(Other areas)	SFNJ122Z01	Instruction Book
A2	SFVE010	45 Adaptor
A3	SFPE43002	Nut Cartridge
A4	SFPEW001	Washer, Cartridge
A5	SFE020A01	Screw, Cartridge
A6	SFPEV001	Screw, Cartridge
A7	SFK0125-01	Overhang Gauge
A8	SFPE0250	Shell Weight
A9 △ (EKA Only)	SFQN018118	2pin Plug
A10	SFPW017302	Sub-weight
A11 △ (PA,PE,PG) Only	QJP09048	Adaptor, 6V Mono
PACKING PARTS		
P1(MC, ○ ※)	SFHP122C03	Carton Box (Silver)
P1 (Other areas) ○	SFHP122N02	Carton Box (Silver)
P1 ※	SFHP122N02	Carton Box (Black)
P2	SFHH120-01	Pad, Front
P3	SFHH120-02	Pad, Rear
P4	SFHD122N05	Pad, Top
P5	SFHD122-03	Pad (A), Turntable
P6	SFHD122N06	Pad (R), Turntable
P7	SFYH00060	Polyethylene Bag, Unit Dust Cover
P8	SFY-W0046	Polyethylene Bag, Turntable
P9	SFB0080	Polyethylene Bag
P10	SFJ15	Polyethylene Bag, Shell Weight
P11	SFHZ003N01	Cam Strobe, Dust Cover
P12	SFHZ122-01	Cover Sheet, 45Adaptor
P13	SFPH99	Cover Sheet, Cords

■ EXPLODED VIEWS

▲ Cabinet and Chassis Parts

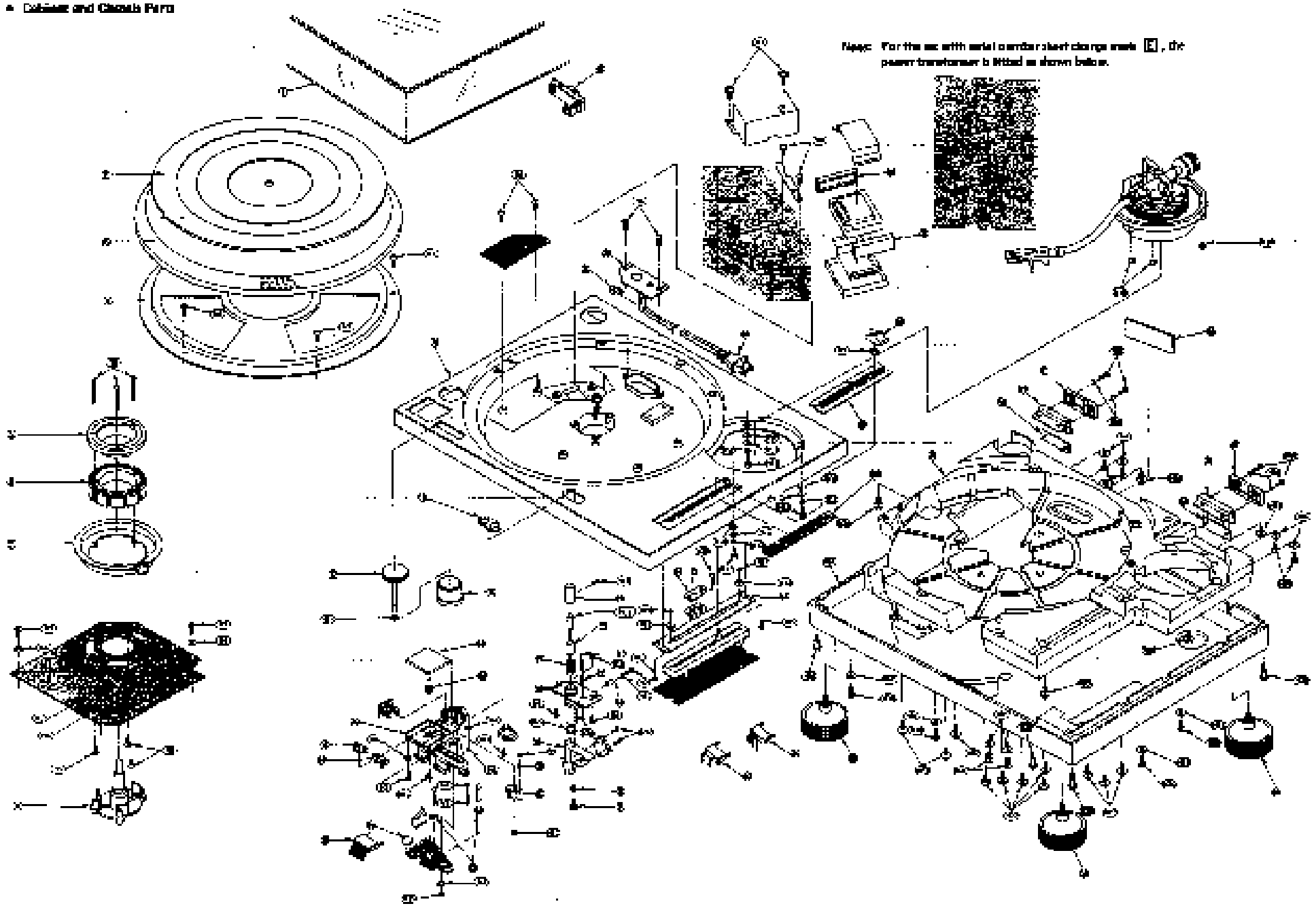

- Tonearm Parts

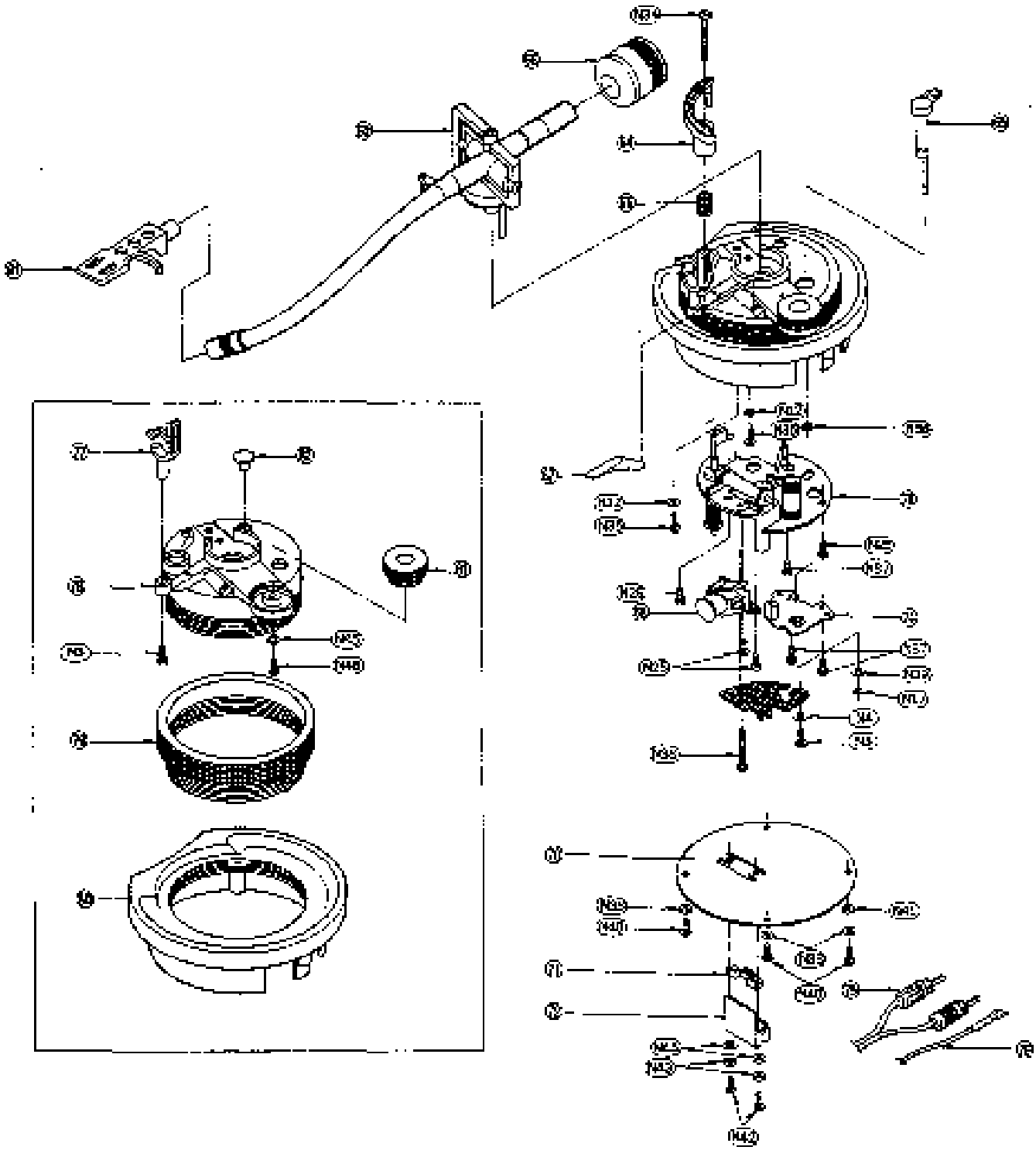

■ CIRCUIT BOARD AND WIRING CONNECTION DIAGRAM

* Power source cir
* Product for Ca

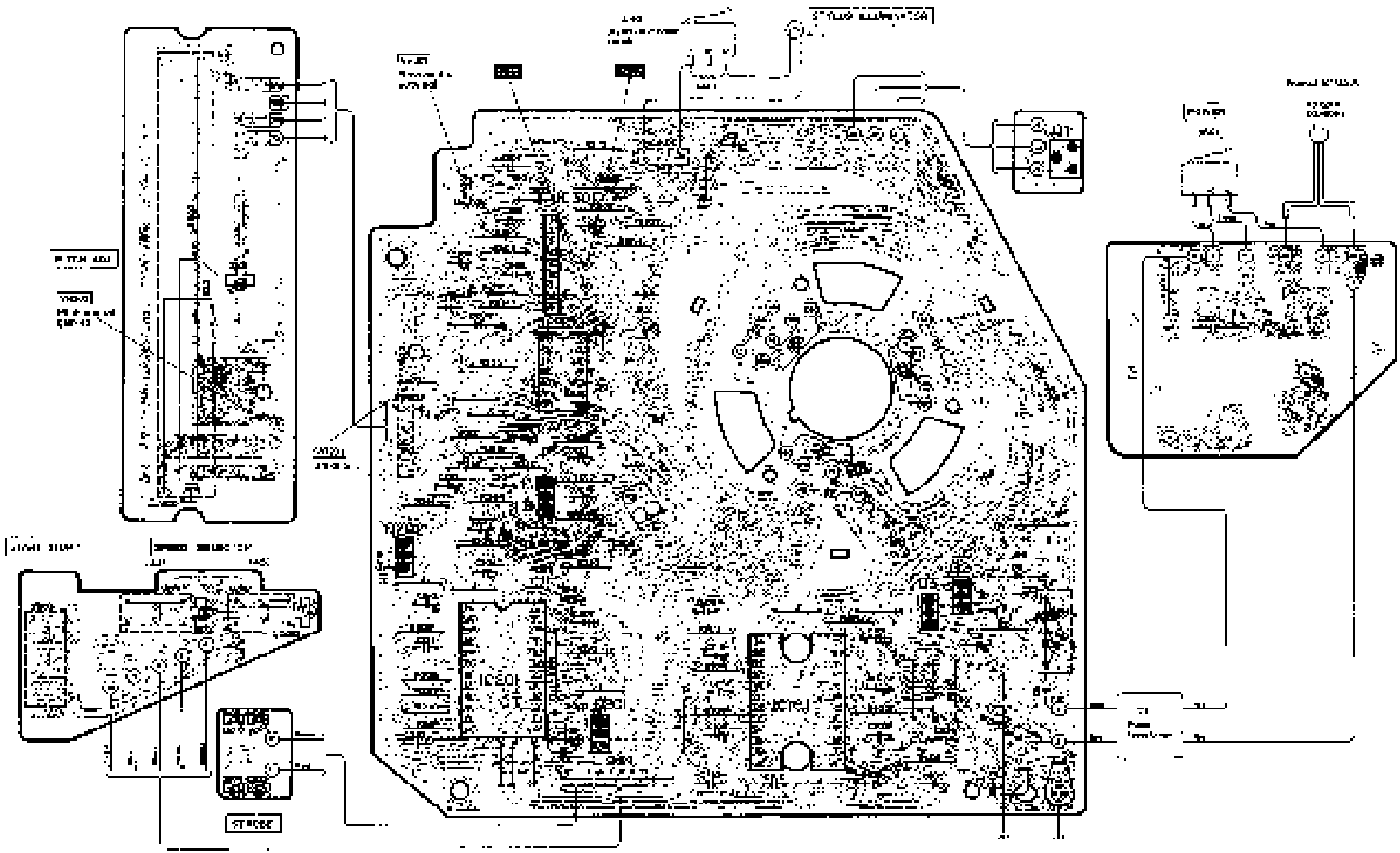

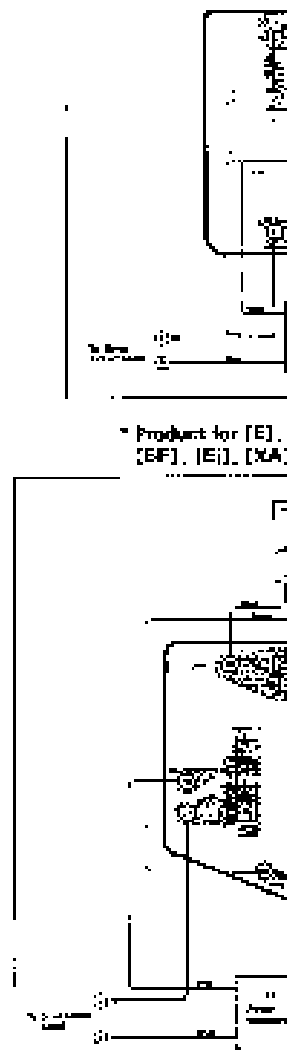

* Product for [E], [EF], [EI], [XA]

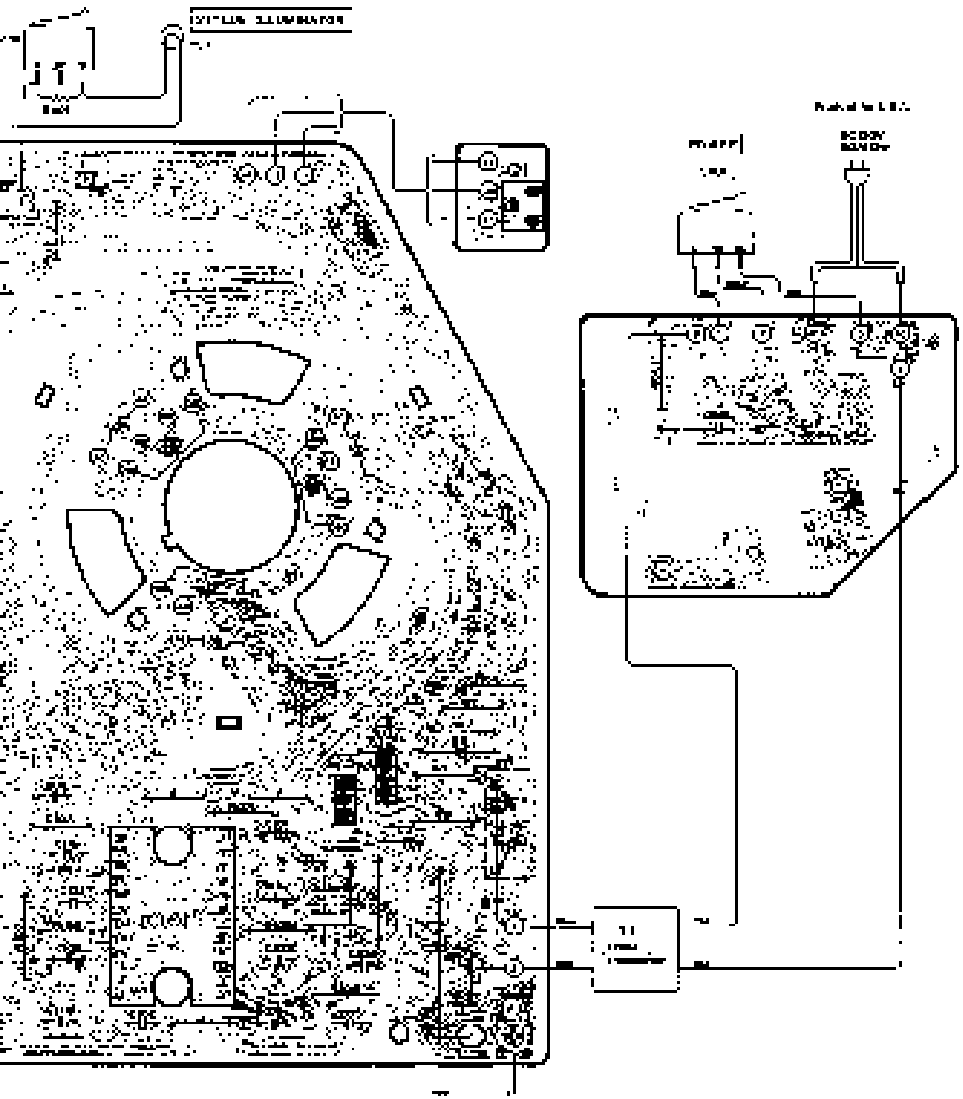

• Power source circuit
• Product for Canada

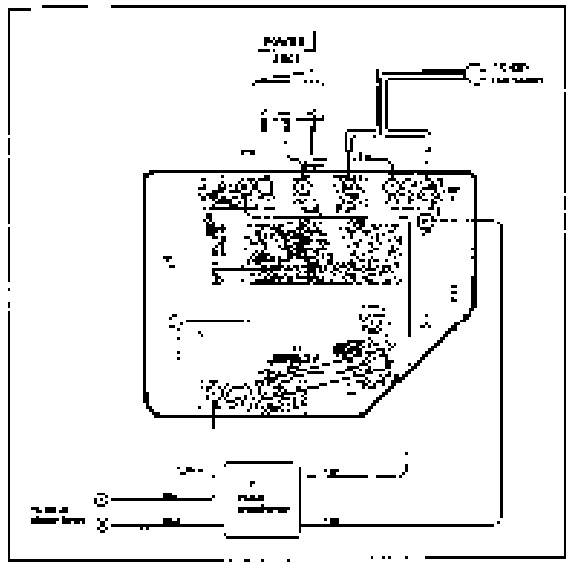

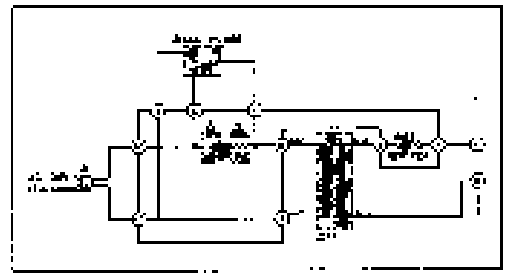

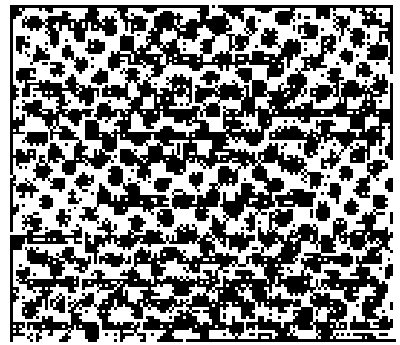

* Product for [E], [EK], [XL], [EG], [EB], [EH] [EF], [EI], [XA], [PA], [PE] and [PC] area

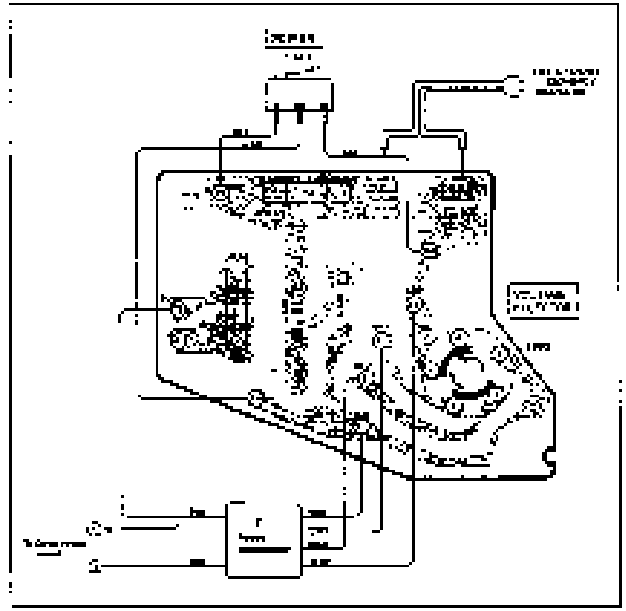

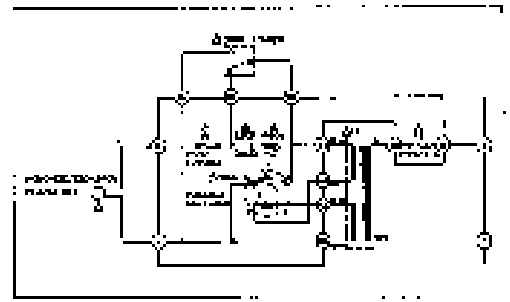

■ SCHEMATIC DIAGRAM

(This schematic diagram may be modified at any time with the development of new technology.)

Note:

1. 5291, 292 : Sound selector switch.
2. [illegible] : Stereo selector.
3. 5291 : Power switch in "off" position.
4. 5481 : Signal monitor switch in "off" position.
5. 5481 : Power switch in "off" position.
6. 8802 : Voltage selector in "220 – 240" position.
7. The voltage values and waveforms are the reference values, which are measured by DC and AC voltmeters between each terminal and the frame in the circuit diagram. Therefore, the values vary with the internal impedance of the meter or the measuring set.
   - ———: Indicates voltage when turned on in the dark.
   - ———: Indicates voltage when turned on in the bright.
8. ———: Chassis line.
9. Important safety notice:
   Components identified by ⚠ mark have special characteristics important for safety. When replacing any of these components, use only manufacturer's specified parts.
10. The part no. of the parts marked in the assembly diagram are for reference only. Regarding the part no. with ◎ mark, please refer to the parts list. Unit with ◎ mark is a repair part. Part A, which is the same as for measurement, please use the part no. in the replacement parts list.

◆ Terminal guide of transistors, diodes and IC's

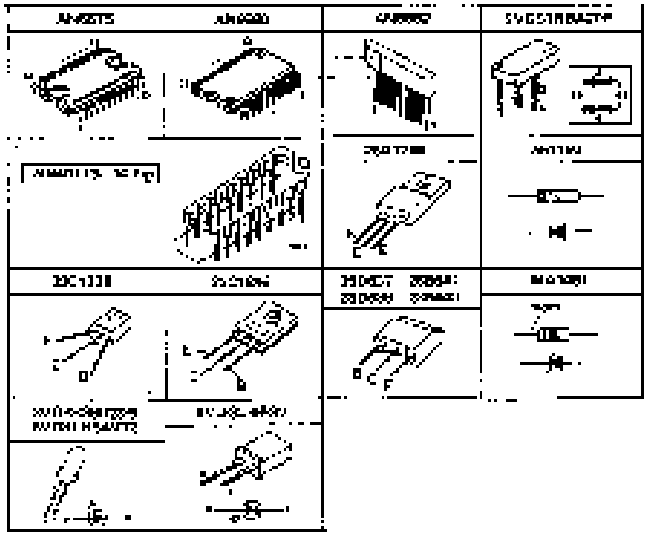

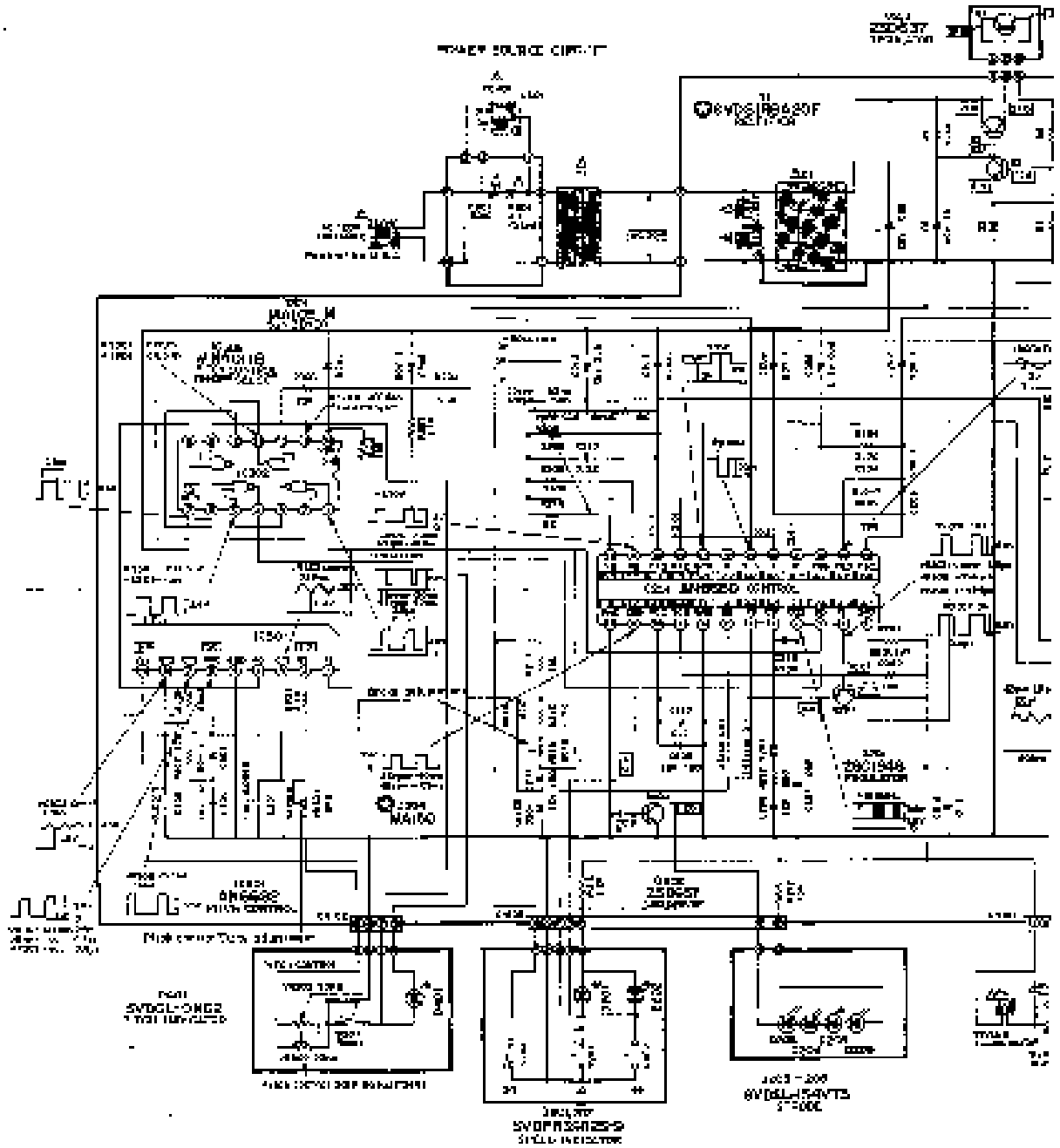

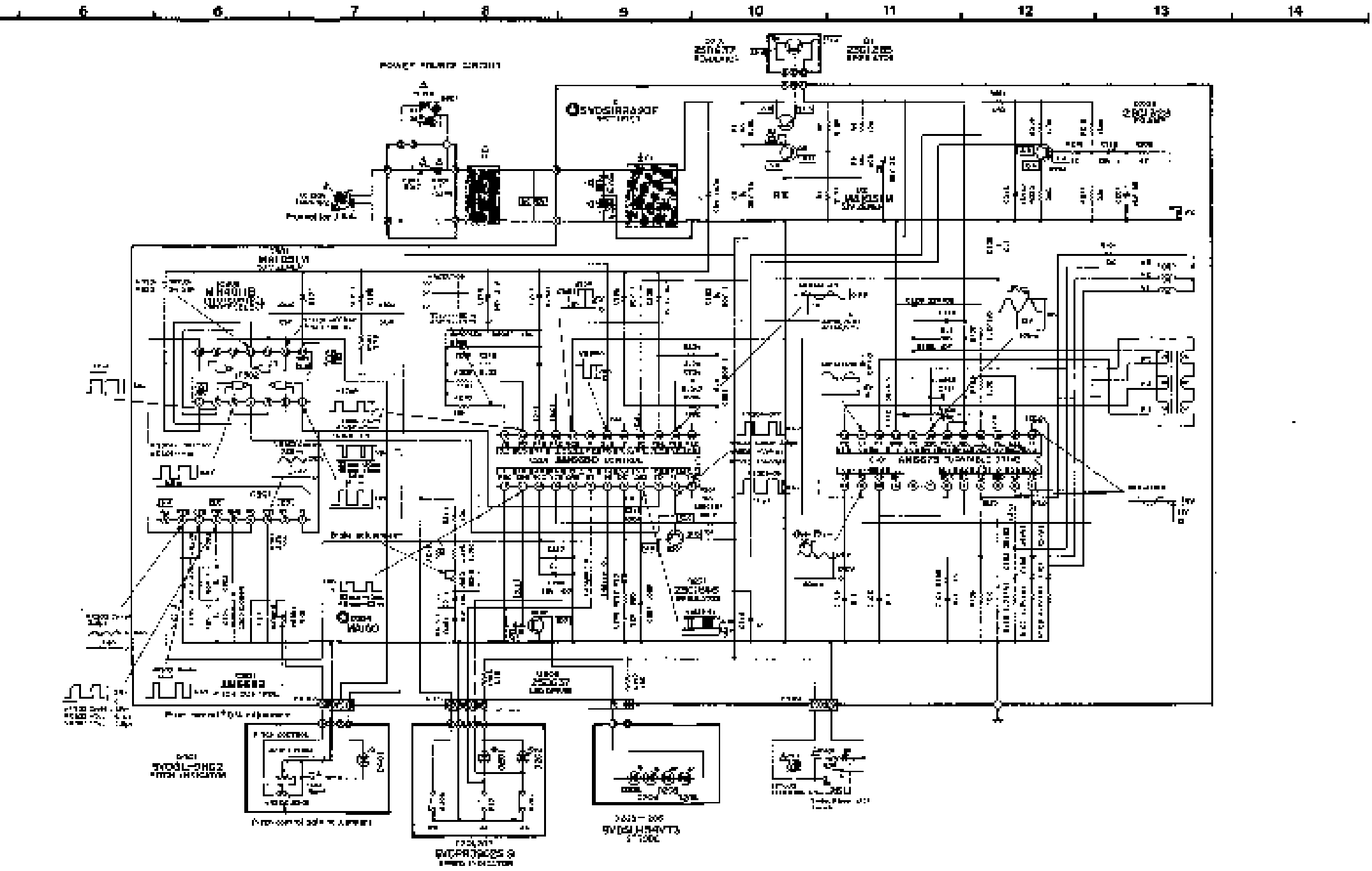
6
6
7
8
9
10
11
12
13
14

SL-1200MK2/1210MK2

■ BLOCK DIAGRAM

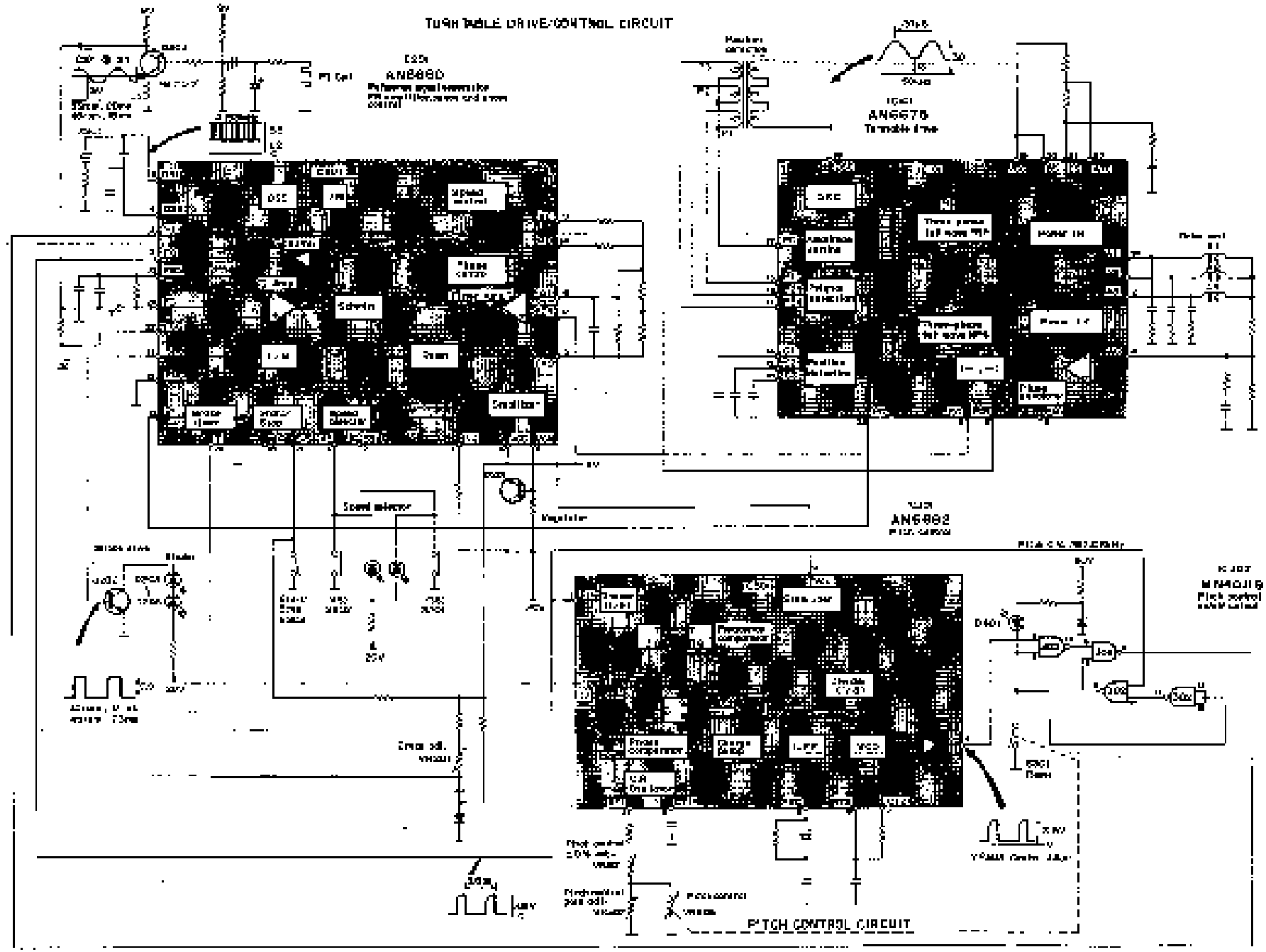

■ PACKING

1. Place the unit (with cartons mounted) as illustrated.
2. Fold the flaps according to the Fig. marks.
3. Seal the flap with adhesive tape.
   * Use gum tape or adhesive cloth tape of 50mm width or wider.
4. For the sides, first fold the flap "a" and then flap "b", and staple. Remember to staple only flap "b". (Use 15 or 18mm staples)

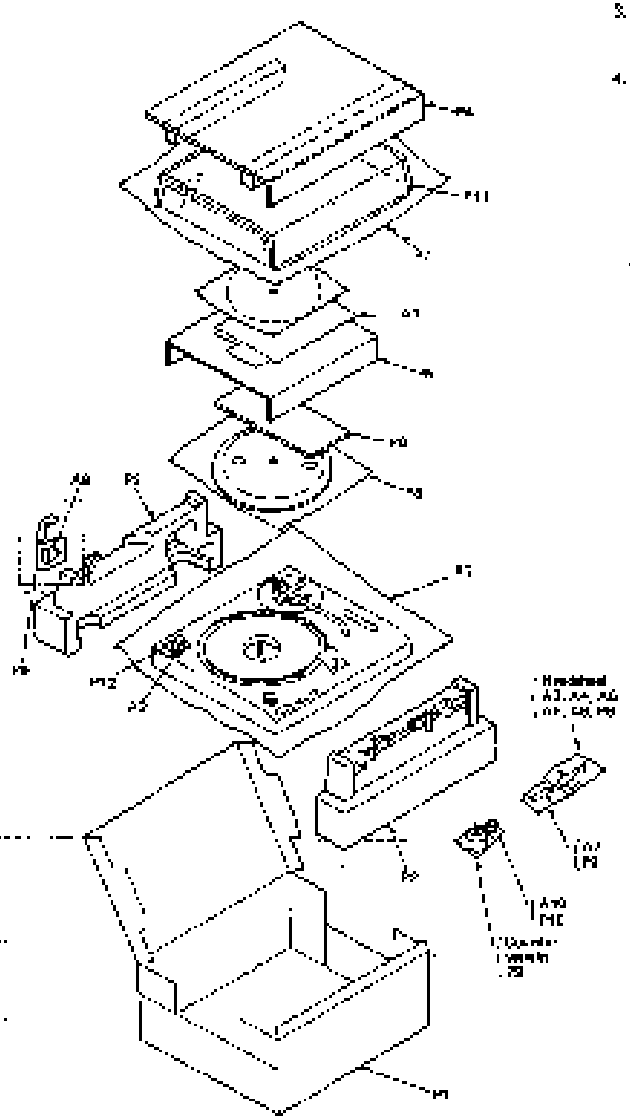

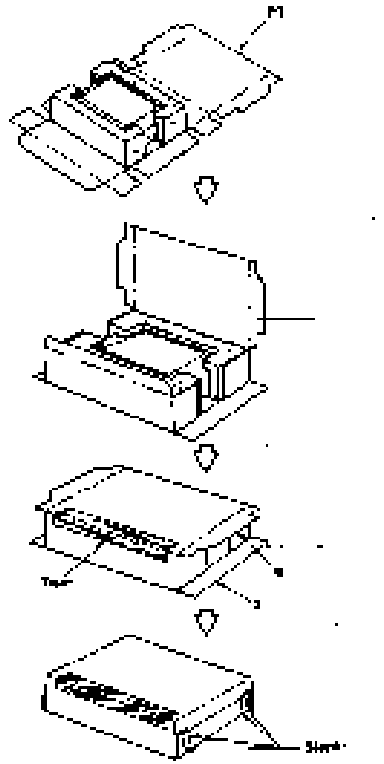

* Stapling positions are shown below.

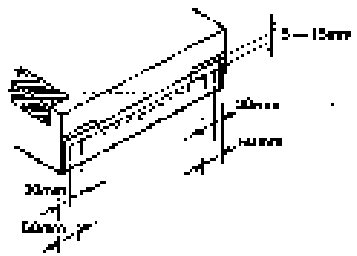

Printed in Japan
D0041240 ⓢ TJC

ORDER NO. SD8001-1778

Service Manual

Turntable System

SL-1210MK2

[XG], [E]

Area

* [XG] is available in European.
* [E] is available in Scandinavia.

For additional information, Please refer to the service manual for Model No. SL-1200MK2 [XG, XA, XGB, XAL, E]

Notes:
* This service manual included only the change of the **SL-1200MK2 [XG, XA, XGB, XAL, E]** service manual (ORDER NO. SD7909-1622)
* When servicing model **SL-1210MK2 [XG, E]**, this service manual and **SL-1200MK2** (ORDER NO. 7909-1622) service manual should be used together.

CHANGES

■ REPLACEMENT PARTS LIST

Ref. No.	Change of Part No. SL-1200MK2 [XG, XA, XGB, XAL, E]	➡ SL-1210MK2 [XG, E]	Part Name & Description	Per Set (Pcs.)	Remarks
			CABINET and CHASSIS PARTS		
10	SFAC122-01	SFAC124S01	Cabinet (Black)	1	○
35	SFSR4k4 SFHK040L [XAL] only	SFSR4k4	Clamper, AC Cord	1	
39	SFUP025X01 SFUP025-01 [XAL] only	SFUP025X01	Blocker, AC Cord	1	
37	RJAZ3ZC SFC1208M [XAL] only	SLA38	AC Cord	1	
42	SFKKF22-03	SFKK124S01	Ornament, Pitch Control Volume	1	
55	SFNN122N01 SFNN122L01 [XAL] only	SFNN124S01 [XG]	Name Plate	1	○
	SFNN123301 [E] only	SFNN124S01 [E]	Name Plate	1	○
			TONE ARM and ARM BASE PARTS		
52	SFPAM18201K	SFPAM18202K	Tone Arm Ass'y	1	○
32	SFGK182-01	SFGK133301	Cap, Rubber	1	
			PACKING PARTS		
P1	SFHP122W01	SFHP124S01	Carton Box	1	○

Technics

Matsushita Electric Trading Co., Ltd.
P.O. Box 288, Central Osaka Japan

■ REPLACEMENT PARTS LIST (Mechanical)

Notes: 1. Part numbers are indicated on most mechanical parts.
Please use this number for parts orders.
2. ⚠ indicates that only parts specified by manufacturer be used for safety.

Ref. No.		Part No.	Part Name & Description
CABINET and CHASSIS PARTS			
1		SFAD122-01A	Dust Cover
2		SFTG172-01P	Turntable Mat
3		SFTE172-01Z	Turntable
4		SFUW172-05	Cover, Turntable
5		SFNC027-01	Cover, Stereo Frame Assy
6		SFNC252-01A	Stereo Frame
7		SFNE272-01B	Fit Bearing Set Assy
8		SFNE222-01A	Shaft, Stereo Frame Assy
9		SFUP122-01	Plate, Shield
10		SFAC124-01	Cabinet
11		SFUM172-04	Ornament, Side Illumination
12		SFKT122-01	Knob, Power Switch
13		SFKX-[illegible]	Dial, Stereo Tuner
14		SFKT075-06	Knob, Start/Stop Switch
15		SFSA122-01	Spring, Start/Stop Knob
16		SFUM122-01	Base, Operation
17		SFKT015-01C	Knob, Speed Selector (33 / 45 r.p.m.)
18		SFCN122-02E	Connector, 3 Pin
19		SFSS172-01	Spacer, Trigger (Stereo Sensor)
20		SFVB5-02	Ball, Rotary Cam
21		SFQA252-01	Spring, Switch Cam
22		SFUW122-03	Cam, Switch
23		SFUW015-11	Spacer, LED
24		SFKR172-01	Cover, Lamp
25		SFCS122-02	Base, Drive
26		SFQA172-01	Spring, Drive Base
27		SFKU172-01	Pin, Lock Cancelar
28		SFUP122-02S	Bracket, Stylus Illumination
29		SFUP122-03	Plate, Lock Extension
30		SFCN122-03E	Connector, 3 Pin
31		SFKD172-01	Pin, Guide
32		SFQA252-01	Spring, Lock Cancelar Pin
33		SFQA001-02	Spring, Lock Operating Plate Wire
34		SFKU172-05	Pin, Lock Operating Plate Wire
35		SFSR004	Clamper, AC Cord
36		SFUF002-X01	Bushing, AC Cord
37	⚠	SJA-82	AC Cord
38		SFUP122-02	Bracket, Power Transformer
39		SFUC122-01	Cushion, Power Transformer
40		SFUP172-01	Stopper, Power Transformer
41		SFKT122-01	Knob, High Control Volume
42		SFKK124-01	Ornament, High Control Volume
43		SFUZ122-01	Shading Cloth, High Control Volume
44		SFUP122-03	Holder, LED
45		SFUP122-01	Bracket, High Control Volume
46		SFDU122-01E	Connector, 3 Pin
47		SFUP122-03	Subpanel, Bottom Base
48		SFAL122-01	Base, Bottom
49		SFUP122-05	Subpanel (R), Hinge
50		SFUP122-04	Subpanel (R), Hinge
51		SFUM170-03	Cover, Hinge
52		SFRC122-03C	Audio Inspector
53		SFUP122-06	Subpanel (L), Hinge
54		SFK101R-03E	Knob, Speed Selector (45 r.p.m.)
55 (XG)		SFNN124-001	Name Plate
55 (E)		SFNK124-001	Name Plate
56		SFXO122-01	Pipe (R)
57		SFXO122-02	Pipe (R)
58		SFAC122-01A	Hinge Assy
TONE ARM and ARM BASE			
61		SFFC131-001K	Head Shell
62		SFHA018-002K	Tone Arm Assy
63		SFAG122-001K	Balance Weight Assy
64		SFFT122-001K	Lift Assy
65		SFFB122-002	Knob, Arm Base Lock
66		SFSA128-03	Spring, Lift Assy
67		SFFA122-003	Knob, Arm Lift
68		SFFL122-005	Oil Damper
69		SFFB122-001	Tone Arm Base Cover
70		SFLR172-04B	Spacer, Phono Cord
71		SFFB122-004	Damper, Phono Cord
72		SFFA122-001K	Tone Arm Frame Base Assy
73		SFFR122-001K	Tone Arm Frame Base Assy
74		SFFR122-001K	Base, Pickup Fix
75		SFCD122-01	Phono Cord
76		SFKL029-01	Ground Wire
77		SFFU122-001K	Arm Base
78		SFFK012-001	Arm Base
79		SFFK012-001	Ring, Arm Base Operation
80		SFFK012-001	Bushing, Arm Base
81		SFFA122-006	Knob, Arm Lock Frame Operation
82		SFGK122-001	Gas Washer
SCREWS, WASHERS and CARGLIPS			
●		XTN2+8BFZ	Screw
●		SFXC020-02	Screw
●		XTN3+8B	Screw
●		XTN2+8B	Screw
●		XTN4+8B	Screw
●		XWA4B	Washer
●		KUC2FT	Circlip
●		KUC2FT	Circlip
●		KUC25FT	Circlip
●		SFXW010-002	Washer
●		XTN3+8BFZ	Screw
●		XBN3+10BFZ	Screw
●		XWE3F-2FZ	Washer
●		XTN3+20BFZ	Screw
●		SFXW-[illegible]	Washer
●		XWE3E19	Washer
●		SFPEW1106	Washer
●		SFPEW1003	Washer
●		XBN3+8B	Screw
●		SFXS17D-01	Screw
●		XTV3+8BFN	Screw
●		XTV3+8B	Screw
●		XTR3+8B	Screw
●		XSN17-01Y	Screw
●		XSN3+14S	Screw
●		SFXW172-05	Washer
●		KUS14FT	Circlip
●		SFUZ172-01E	O Ring
●		XTN3+8B	Screw
●		XBN3+8B	Screw
●		XBA3BFZ	Washer
●		XWA3B	Washer
●		XWD3	Washer
●		SFXO020-[illegible]	Screw
●		KUN3FT	Circlip
●		XTN3+6B	Screw
●		XTV3+8BFN	Screw
●		XWE4A10BW	Washer
●		XTR04-2B	Screw
●		XTN3+25H-02	Screw
●		XBZ3+10BW6	Screw
●		SFFEW172B	Washer
●		XWG2B	Washer
ACCESSORIES			
A1(XG)		SFAU122-001	Instruction Book
A1(E)		SFAU122-001	Instruction Book
A2		SFAE012-[illegible]	Accessory Assy
A3		SFPEN-[illegible]	Pen Cartridge
A4		SFPEW-[illegible]	Pen Cartridge
A5		SFPEW-[illegible]	Screw Cartridge
A6		SFPEW-[illegible]	Screw Cartridge
A7		SFKA015-01	Instruction Cover
A8		SFFZE-[illegible]	Shell Weight
PACKINGS			
P1		SFHH124-001	Carton
P2		SFHH122-01	Pad, Frame
P3		SFHH122-02	Pad, Rear
P4		SFHH122-01	Pad, Top
P5		SFHH122-02	Pad, Left, Turntable
P6		SFHH122-03	Pad, Right, Turntable
P7		SFVH-[illegible]	Polyethylene Cover, Turntable and Tone Arm
P8		SFVH-[illegible]	Polyethylene Cover, Turntable

Printed in Japan
80073250 © A.M.

ORDER NO. SD7908-1622

Service Manual

SL-1200MK2

Turntable System

SL-1200MK2

(XG), (XA), (XGB)
(XAL), (E)

* The model SL-1200MK2 (XG) is available in European only.
* The model SL-1200MK2 (XA) is available in Asia, Latin America, Middle East and Africa only.
* The model SL-1200MK2 (XGB) is available in Belgium only.
* The model SL-1200MK2 (XAL) is available in Australia only.
* The model SL-1200MK2 (E) is available in Scandinavia only.

SPECIFICATIONS (Specifications subject to change without notice. Weight and dimensions are shown are approximate.)

General

Power supply:	~110–120/220–240 50 or 60 Hz
Power consumption:	13.5 W
Dimensions: (W x H x D)	46.3 x 16.2 x 36 cm (17-27/32" x 6-3/64" x 14-17/64")
Weight:	12.5 kg (27.5 lb)

Turntable section

Type:	Quartz direct drive Manual turntable
Drive method:	Direct drive
Motor:	Brushless DC motor
Turntable platter:	Aluminum diecast Diameter 33.2 cm (13-5/64") Weight 2 kg (4.4 lb)
Turntable speeds:	33-1/3 rpm and 45 rpm
Starting torque:	1.5 kg.cm (1.3 lb.in)
Build-up characteristics:	0.7 s. from standstill to 33-1/3 rpm
Braking system:	Electronic brake
Wow and flutter:	0.01% WRMS* 0.025% WRMS (JIS C5521) ±0.03% peak (IEC 98A Weighted)

* This rating refers to turntable assembly alone, excluding effects of record, cartridge or tonearm, but including platter. Measured by obtaining signal from built-in frequency generator at motor assembly.

Rumble:	−66 dB (IEC 98A Unweighted) −78 dB (IEC 98A Weighted)

Tonearm section

Type:	Universal
Effective length:	230 mm (9-1/16")
Arm height adjustment range:	0–6 mm
Overhang:	15.5 mm (19/32")
Effective mass:	12 g (without cartridge)
Offset angle:	22°
Friction:	Less than 7 mg (lateral, vertical)
Tracking error angle:	Within 2°32' (at the outer groove of 30 cm (12") record
Stylus pressure	Within 0°30' (at the inner groove of 30 cm (12") record
adjustment range:	0–2.5 g
Applicable cartridge weight range:	6–10 g (13.5–17.5 g (including headshell))
(with auxiliary weight):	9.5–13 g (17–20.5 g (including headshell))
(with shell weight)	3.5–6.5 g (11–14 g (including headshell))
Headshell weight:	7.5 g

Cartridge section

Model No.	EPC-207C
Type:	Moving magnet
Frequency response:	20 Hz to 25 kHz 20 Hz to 15 kHz ±2 dB
Output voltage:	5 mV at 1 kHz 5 cm/s zero to peak lateral velocity (8.5 mV at 1 kHz 10 cm/s zero to peak 45° velocity (DIN 45500))
Channel separation:	25 dB at 1 kHz
Channel balance:	Within 2 dB at 1 kHz
Compliance (dynamic):	10 x 10^{-6} cm/dyne at 100Hz
Stylus pressure:	1.75 ±0.25 g (17.5 ±2.5 mN)
Load impedance:	47 kΩ to 100 kΩ
Weight:	5.6 g (cartridge only)
Replacement stylus:	EPS-207CD (Elliptical stylus)

Technics

Matsushita Electric Trading Co., Ltd.
P.O. Box 288, Central Osaka Japan

SL-1200MK2

TECHNISCHE DATEN

Allgemeine Daten

Stromversorgung:	110-120/220-240 V, 50/60 Hz Wechselstrom
Leistungsaufnahme:	18,5 W
Abmessungen (B x H x T):	45,3 x 18,2 x 36 cm
Gewicht:	12,5 kg

Plattenspieler

Typ:	Manueller Quarz Direktantrieb Plattenspieler
Antrieb:	Direktantrieb
Motor:	Kollektorloser Gleichstrommotor
Plattenteller:	Aluminium-Sandguß Durchmesser 33,2 cm Gewicht 2 kg
Plattenteller-Drehzahlen:	33-1/3 und 45 U/min
Anlaufdrehmoment:	0,7 sec vom Stillstand auf 33-1/3 U/min
Bremssystem:	Elektronische Bremse
Gleichlaufschwankungen:	0,01% WRMS* (JIS C5521) ±0,035% Spitze (IEC 98A bewertet)

Diese Nennleistung bezieht sich auf das Laufwerk-Rauschverhalten, ausschließlich Einflüsse von Schallplatte, Tonabnehmer oder Tonarm, aber einschließlich Plattenteller. Gemessen anhand von Signalen vom eingebauten Frequenzgenerator des Motorbauteils.

Rumpel-Geräuschspannungsabstand:	−33 dB (IEC 98A unbewertet) −73 dB (IEC 98A bewertet)

Tonarm

Typ:	Universal-Tonarm
Effektive Länge:	230 mm
Tonarmhöhe-Einstellbereich:	0–6 mm
Überhang:	15 mm
Effektive Masse:	12 g (ohne Tonabnehmer)
Kröpfungswinkel:	22°
Lagerreibung:	Weniger als 7 mg (horizontal, vertikal)
Auflagekraft-Einstellbereich:	0–3,5 g
Zulässiger Tonabnehmer-Gewichtsbereich:	6–10 g (einschließlich Tonarmkopf)
(mit Zusatz-Gegengewicht:	13,5–17 g (einschließlich Tonarmkopf)
Gewichtsbereich:	9,5–13 g
(mit Zusatzgewicht)	17–20,5 g (einschließlich Tonarmkopf)
Tonarmkopf-Gewicht:	11–14 g (einschließlich Tonarmkopf)
	7,5 g

Tonabnehmer

Modell-Nummer:	EPC-207C
Typ:	Magnetischer Tonabnehmer
Frequenzgang:	20 Hz bis 25 kHz 20 Hz bis 15 kHz ±2 dB
Ausgangsspannung:	3 mV bei 1 kHz 5 cm/s, Nutzer-Spitze, lateral (8,8 mV bei 1 kHz 10 cm/s, Nutzer-Spitze, 45° (DIN 45500))
Kanaltrennung:	25 dB bei 1 kHz
Kanalabweichung:	Innerhalb 2 dB bei 1 kHz
Nachgiebigkeit (dynamisch):	10×10^{-6} cm/dyn bei 100 Hz
Auflagekraft:	1,75 ±0,25 g (17,75 ±2,5 mN)
Impedanz:	±7 kΩ bis 100 kΩ
Gewicht:	5,6 g (ohne Tonarmkopf)
Ersatznadel:	EPS-207ED (Elliptische Nadel)

Änderungen der technischen Daten vorbehalten.
Die angegebenen Gewichts- und Abmessungsdaten sind ungefähre Werte.

SPECIFICATIONS

Généralités

Alimentation:	Alternatif 110-120/220-240V, 50 ou 60 Hz
Consommation:	18,5W
(L x H x P)	
Poids:	12,5 kg

Platine de lecture

Type:	Entraînement direct à quartz Platine manuelle
Système d'entraînement:	Entraînement direct
Moteur:	Moteur CC sans balai
Plateau de lecture:	Aluminium moulé sous pression Diamètre 33,2 cm Poids 2 kg
Vitesses de rotation:	33-1/3 et 45 t/p.m.
Couple de démarrage:	1,5 kg cm
Caractéristiques d'augmentation:	0,7 s (rotation de 33-1/3 t/p.m.)
Système de freinage:	Frein électronique
Pleurage et scintillement:	0,01% de valeur efficace* 0,025% de valeur efficace (JIS C5521) ±0,035% de crête (IEC 98A Pondéré)

*Ce chiffre nominal se rapporte à l'ensemble du tourne-disque seul excluant les effets du disque, de la cellule pick-up ou du bras de lecture, mais comprenant le plateau. Mesuré par l'intermédiaire d'un signal provenant du générateur de fréquences incorporé de l'ensemble du moteur.

Ronflement:	−50 dB (IEC 98A Non pondéré) −73dB (IEC 98A Pondéré)

Bras de lecture

Type:	Bras de lecture universel
Longueur effective:	230 mm
Portée du réglage de la hauteur du bras:	0–6 mm
Porte-à-faux:	15 mm
Masse réelle:	12 g (sans la cellule pick-up)
Angle d'inclinaison du plateau:	En deçà de 2° 32' au silion extérieur d'un disque de 30 cm En deçà de 0° 32' au silion intérieur d'un disque de 30 cm
Angle de dérapage:	22°
Frottement:	Moins de 7 mg (vertical et horizontal)
Plage de réglage de la pression d'appui:	0–3,5 g
Gamme du poids de la cellule pick-up utilisable:	6–10 g 13,5–17,5 g (y compris la coque porte-cellule)
(avec contrepoids auxiliaire)	9,5–13 g 17–20,5 g (y compris la coque porte-cellule)
(avec contrepoids de la cellule)	8,5–8,5 g 11–14 g (y compris la coque porte-cellule)
Poids de la cellule:	7,5 g

Cellule pick-up

No. de modèle:	EPC-207C
Type:	Aimant mobile
Réponse en fréquence:	20 Hz à 25 kHz 20 Hz à 15 kHz ±2dB
Tension de sortie:	3 mV à 1 kHz, 5 cm/s, zéro à vitesse latérale de crête (8,5 mV à 1 kHz 10 cm/s, zéro à vitesse 45° de crête (DIN 45500))
Séparation de canal:	25 dB à 1 kHz
Equilibrage des canaux:	En deçà de 2 dB à 1 kHz
Elasticité (dynamique):	10×10^{-6} cm/dyne à 100 Hz
Pression de la pointe de lecture:	1,75 ±0,25 g (17,5 ±2,5 mN)
Impédance de charge:	47 kΩ à 100 kΩ
Poids:	5,6 grammes (cellule seule)
Pointe de lecture de remplacement:	EPS-207ED (Forme elliptique)

Les spécifications sont susceptibles d'être modifiées sans préavis.
Les poids et les dimensions donnés sont approximatifs.

■ CONTENTS

■ DISASSEMBLY PROCEDURE

How to remove panel cover

1. Remove head shell and turntable.
2. Secure arm with arm clamp.
3. Remove 6 screws ⊖ of the panel cover as shown in Fig. 1

How to remove stator frame coil and F.G detector coil

4. Remove 3 connectors ⊕ and 2 read wires ⊕ from cover transformer as shown in Fig. 2.
5. Remove 3 screws ⊖ of the drive circuit board and 3 screws ⊖ of the stator frame cover as shown in Fig. 2.
6. Disconnect 18 soldered parts ⊕ of the stator coil and 4 soldered parts ⊕ of the F.G detector coil as show in Fig. 3.
7. Remove 3 screws ⊖ of the stator frame ass'y as shown in Fig. 3.

How to remove bottom base ass'y

8. Remove 4 audio insulators. (Counterclockwise rotation)
9. Remove 17 screws and spacer ⊕ as show in Fig. 4.
10. Remove 11 screws ⊕ as shown in Fig. 4.

How to remove stylus-illuminator lamp

11. Remove 2 screws ⊖ of the stylus-illuminator lamp ass'y as shown in Fig. 5.
12. Remove 1 screw ⊕ as shown in Fig. 6.

How to remove neon-illuminator L.E.D.

13. Remove 4 screws ⊕ as shown in Fig. 5.
14. Remove L circlip. ⊕ and switch cam ⊕ as shown in Fig. 6.
15. Remove strobo-illuminator case.

How to remove tone arm

16. Remove 4 screws ⊖ of the arm base cover as shown in Fig. 6.
17. Remove 2 screws ⊖ of the phono cord clamper as shown in Fig. 5.
18. Remove phono cord clamper as shown in Fig. 7.
19. Remove 2 screws ⊖ of the phono cord p.c.b. as shown in Fig. 8
20. Remove 2 screws ⊕ as shown in Fig. 8.
21. Remove 2 screws ⊕ of the silicon oil damper as shown in Fig. 8.
22. Remove 3 screws ⊕ as shown in Fig. 8.
23. Remove 2 screws ⊖ of the tone arm as shown in Fig. 9.

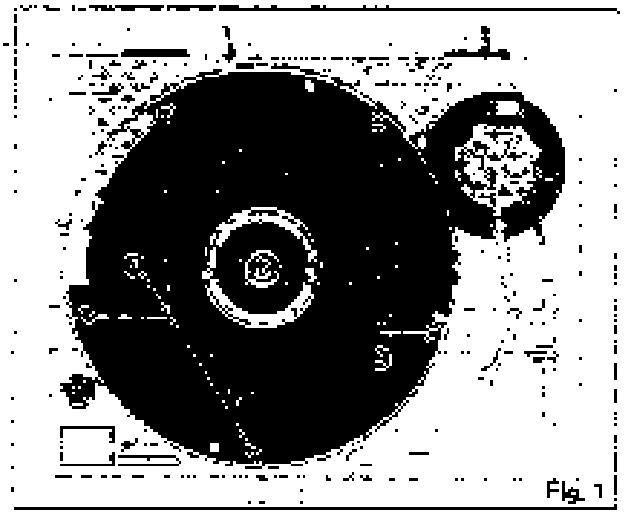
Fig. 1

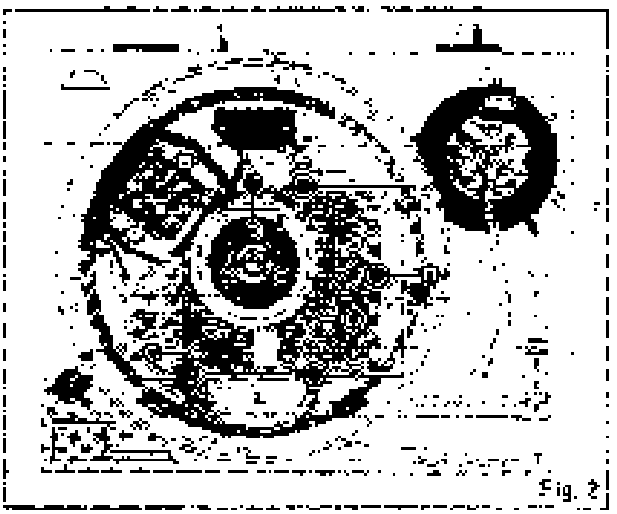
Fig. 2

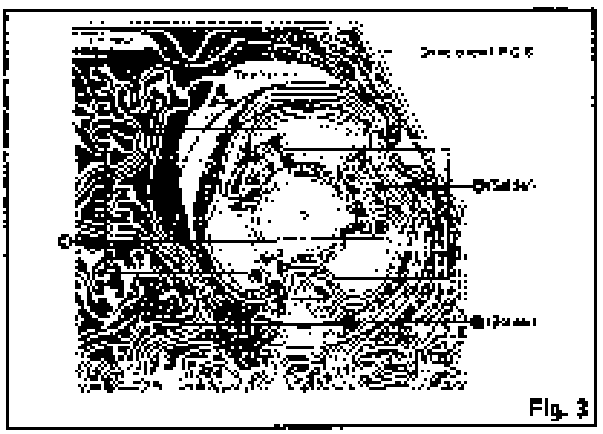
Fig. 3

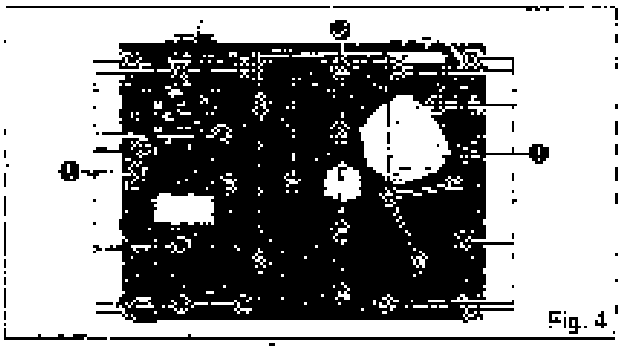
Fig. 4

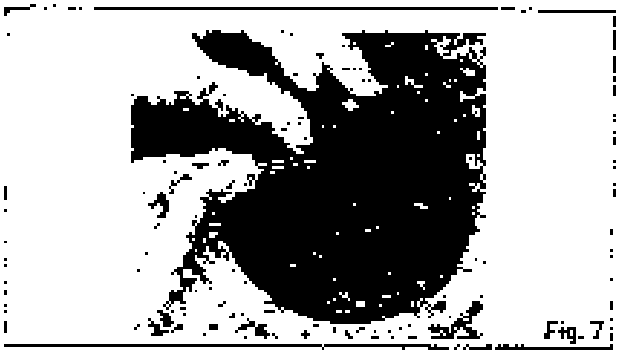
Fig. 7

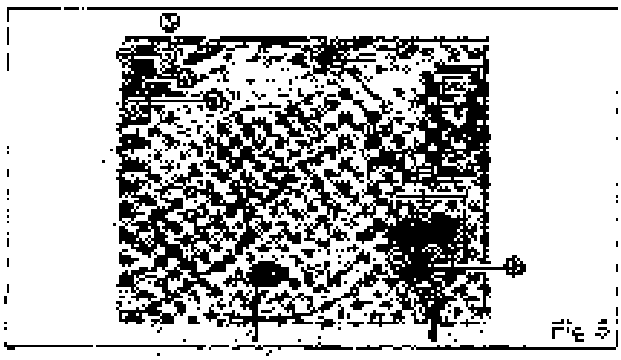
Fig. 5

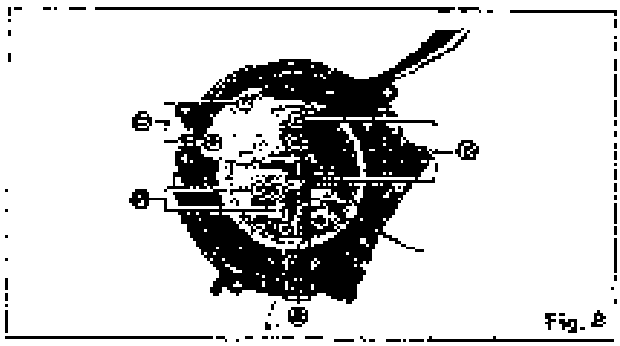
Fig. 8

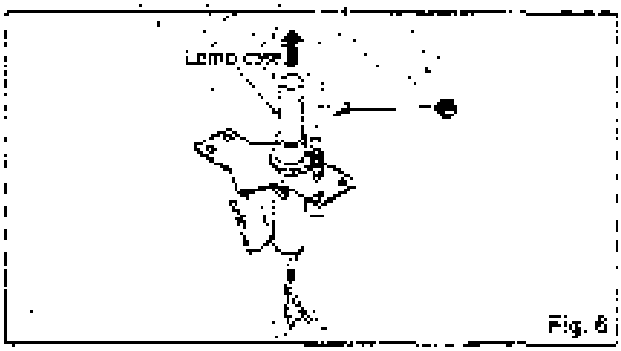

Fig. 6

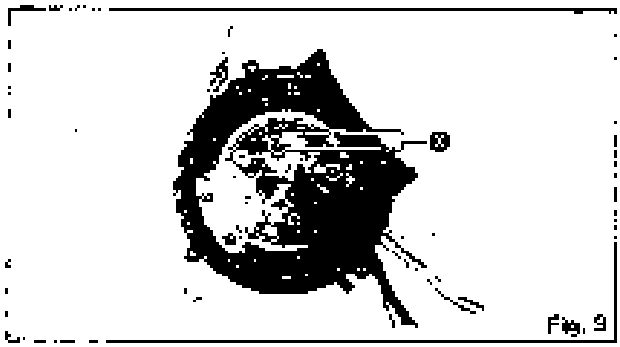
Fig. 9

■ PARTS IDENTIFICATION

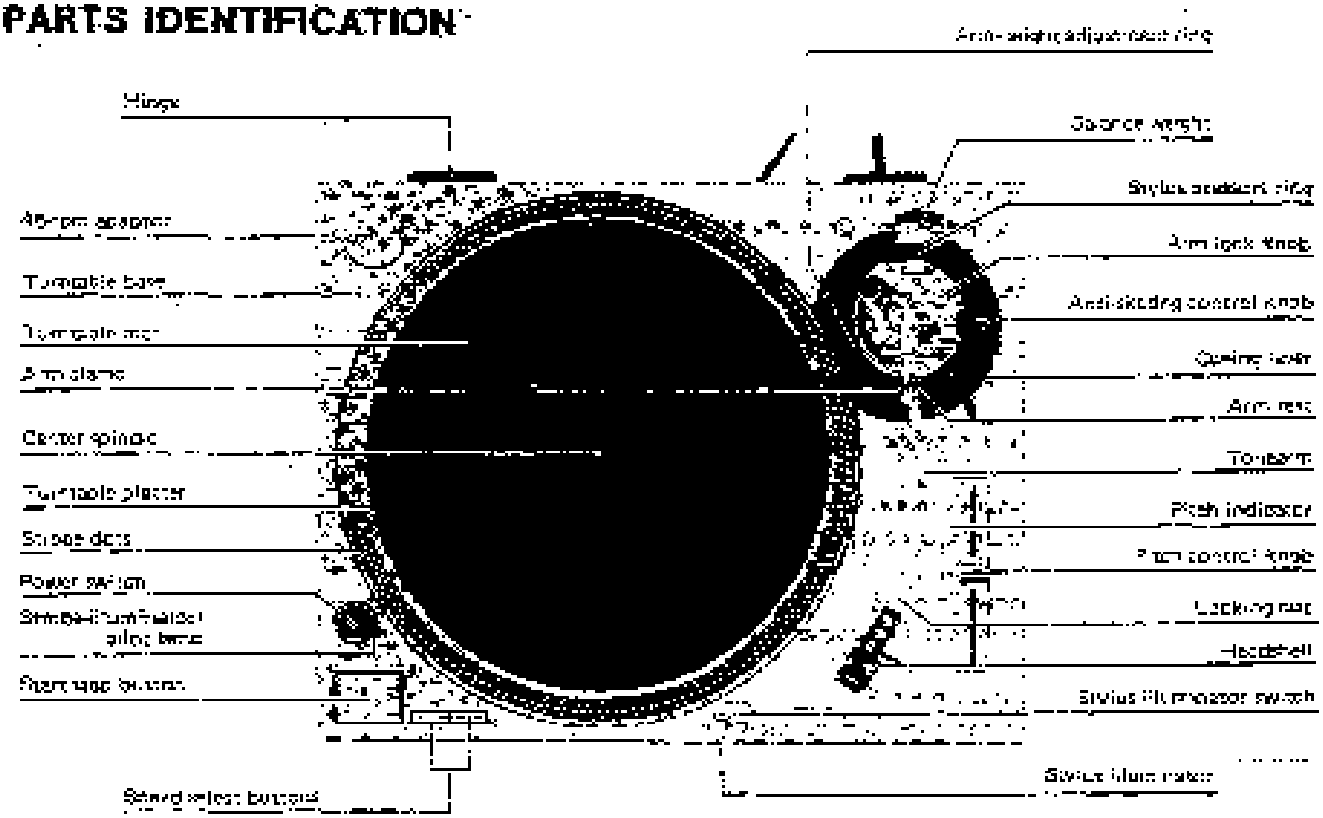

Fig. 16

■ ARM BASE ASSEMBLING PROCEDURE

1. Attach the control ring to the arm base seat. (The control ring should be rotated counterclockwise.)
2. Completely tighten the control ring, and then loosen it 1.5~2.5 turns to set the scale to "3". (See Fig. 11)

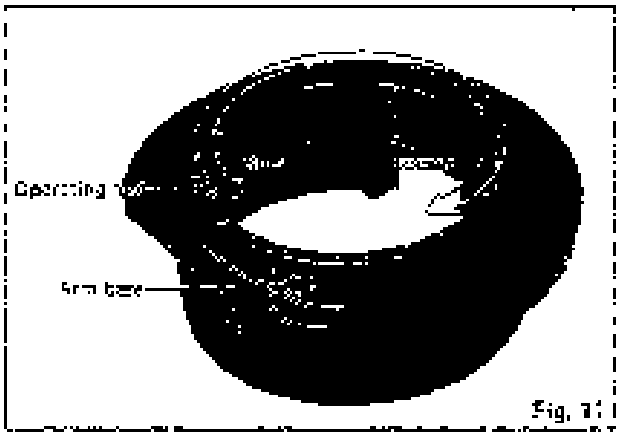

Fig. 11

3. Hold the arm base and set the red line mark on the arm base to the scale near "2", then turn the arm base clockwise. (See Fig. 12)
Note:
Take care not to allow deflection of the predetermined positions of the control ring and arm base seat.

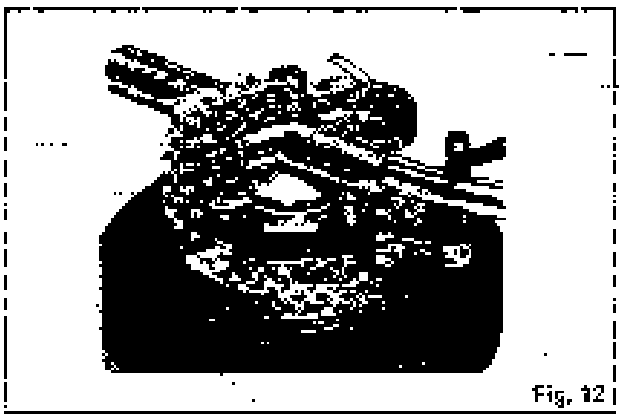
Fig. 12

4. Adjust the arm base so that the red line mark on the arm base is set to the scale "2" of the control ring. Next, secure the positioning base plate with two screws. (See Fig. 13)

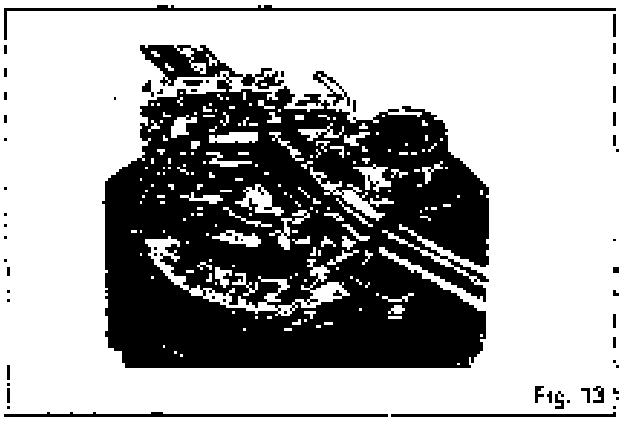
Fig. 13

5. Rotate the control ring and make sure that the arm base shifts within the range of 0~2 mm. (See Figs. 14 and 15) If it does not shift within the specified range, the arm base position is deflected. In that case, disassemble the parts and check as specified in step 3.

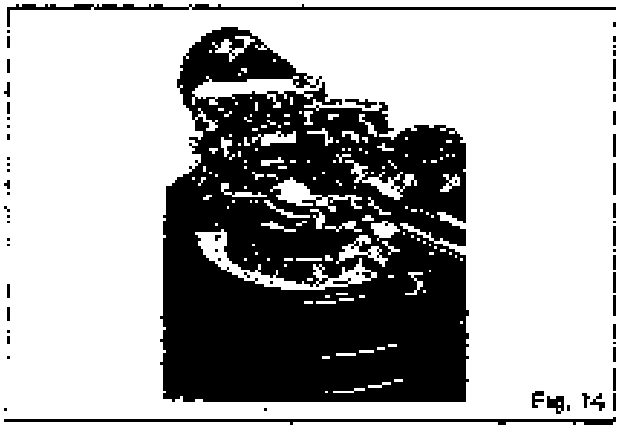
Fig. 14

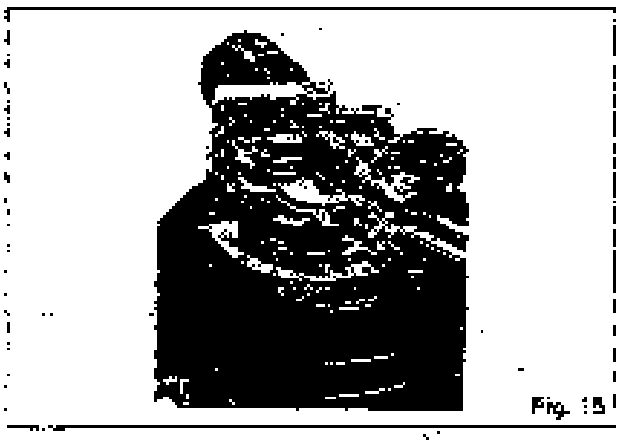
Fig. 15

■ ADJUSTMENT OF CANCELLER SPRING POSITION

If the arm body or PU base plate is replaced, be sure to set the canceller knob to "0.5" and make sure that the canceller spring is in contact with the arm shaft. (See Fig. 16) If the canceller spring is deflected, adjust it as follows:

1. Clamp the arm on the rest.
2. Set the canceller knob to "0.5".
3. Remove the PU base plate, adjust gear ❷ so that the canceller spring is in the position of Fig. 16.
4. Mount the PU base plate onto the arm base and check the spring position.

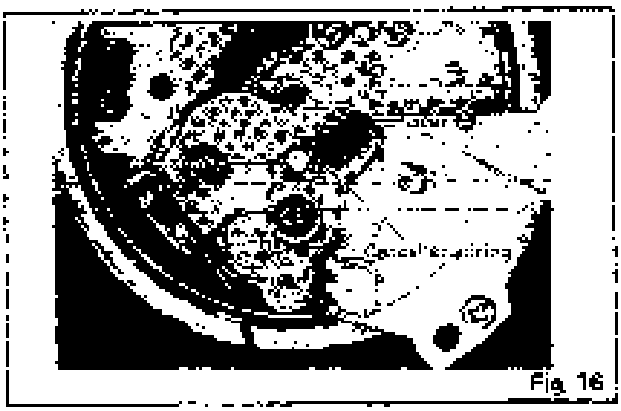

Fig. 16

■ ADJUSTMENTS

Pitch control (fine adjustment of speed) (See Figs. 18 and 19.)

When the pitch control knob is located at the center of the position after turning on the power, the green LED indicator is lit showing the operating condition for the predetermined speed (either 33-1/3 or 45 rpm). The pitch control is variable in a range of about ±8%

Adjustment should be done on the basis of indicator scale. Figures on the indicator show approximate percentages for variable pitch control.

When the strobe dots in 4 stages marked at the peripheral edge of the turntable appear to be stationary, variation of individual pitches is shown. (See Fig. 18.)

Note:

The strobe-illumination of this unit employs a strobe-illuminator LED synchronized with the precise quartz frequency.

For fine adjustment of the turntable speed, be sure to effect the adjustment according to the LED illumination.

The LED illumination is not synchronized with fluorescent lamps.

Adjustment of arm-lift height (See Figs. 20 and 21.)

The arm-lift height (distance between the stylus tip and record surface when cueing lever is raised) has been adjusted at the factory before shipping to approximately 8-13mm.

If the clearance becomes too narrow or too wide, turn the adjustment screw clockwise or counterclockwise, while pushing the arm lift down.

Clockwise rotation

—distance between the record and stylus tip is decreased.

Counterclockwise rotation

—distance between the record and stylus tip is increased.

Note:

As the adjusting screw has hexagonal head, be sure to make the adjustment while depressing the arm lift, or the screw will not move freely.

Also be sure that the hexagonal head retracts correctly into the arm lift when the lever is released.

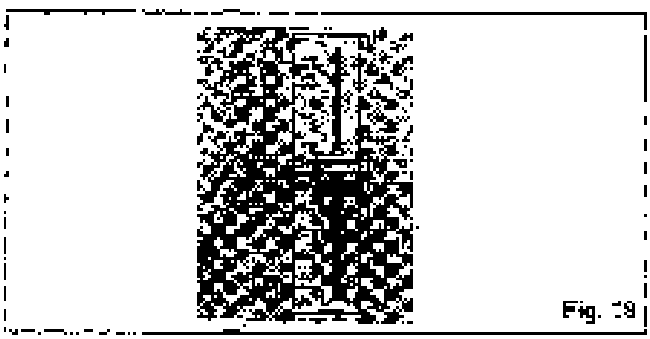

Fig. 18

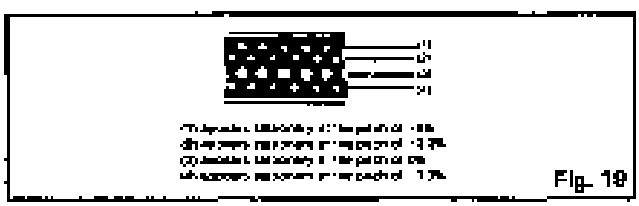

Fig. 19

Adjustment of the tonearm height (See Fig. 22.)

The height of the tonearm can be adjusted up to 6 mm, and a scale is provided on the adjust ring in 0.5 mm increments. Be sure to set the proper arm height using the adjust ring scale and referring to the table.

Height of cartridge (mm) (H)	Scale reading on the arm-height adjust ring
15	0
16	1
17	2
18	3
19	4
20	5
21	6

For example, if the cartridge height is 17.5 mm, the arm-height adjust ring should be positioned at the intermediate location between 2 and 3 on the scale. (See Fig. 22.)

Caution:

Be sure to lock the tonearm by turning the arm lock knob in the direction indicated by the arrow after finishing the height adjustment for the tonearm.

Lubrication (See Fig. 23.)

Apply 2 or 3 drops of oil once after every 2000 hours of operation.

The time interval is much longer than that for conventional type motors (200-500 hours).

Please purchase original oil. (Part number is **SFWO 010.**)

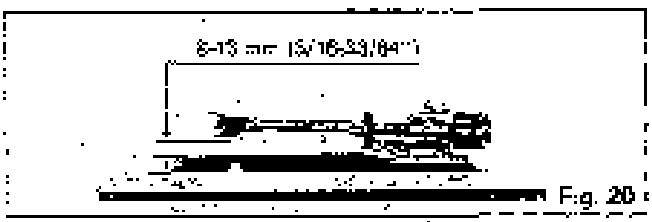

Fig. 20

Fig. 21

Fig. 22

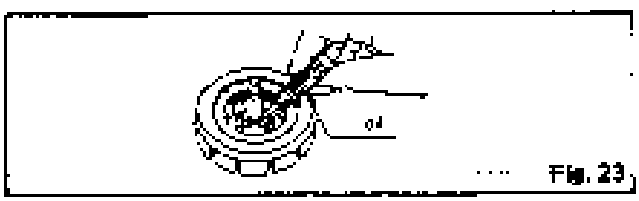

Fig. 23

■ JUSTIERUNGEN

Drehzahl-Feineinstellung (Vgl. Abb. 18 und 19.)

Wenn der Drehzahl-Feineinsteller beim Einschalten der Stroboskoplampe in einer mittleren Stellung ist, leuchtet der grüne LED-Anzeiger auf und zeigt den Feinfrequenzbereich (die korrektive Drehzahl [entweder 33 1/3 oder 45 U/min]) an. Die Drehzahl ist über einen Bereich von ca. ±3% regelbar.

Die Zahlen auf dem Anzeiger geben ungefähre Prozentwerte für die Drehzahlregulierung an.

Wenn eine der vier Abtastpunktmarkierungen am Plattenrand stationär zu bleiben scheint, so wird deutlich die schwachere Drehzahlanzeige (bzw. Nenndrehzahl) eingeschaltet. (Vgl. Abb. 19.)

Anmerkung:

Die Stroboskopleuchtung dieses Plattenspielers verwendet eine Stroboskop LED-Lampe, die mit der gesamten Quarzfrequenz synchronisiert ist.

Die Drehzahl-Feineinstellung muß unter der Beleuchtung durch diese LED-Lampe durchgeführt werden. Die LED-Lampe ist nicht mit Leuchtstofflampen synchronisiert.

Justierung der Tonarmhöhe (Vgl. Abb. 20 und 21.)

Die Tonarmhöhe, d.h. der Abstand zwischen Kopfsystem und Schallplattenoberfläche, wenn der Lift-Hebel angehoben ist, ist werkseitig auf ungefähr 8 – 13 mm eingestellt worden.

Falls der Abstand zu groß oder zu klein wird, drehen Sie die Justierschraube im Uhrzeigersinn oder Gegenuhrzeigersinn während Sie die Tonarmlifthöhe nach unten drücken.

Drehung im Uhrzeigersinn
— Der Abstand wird kleiner.

Drehung im Gegenuhrzeigersinn
— Der Abstand wird größer.

Anmerkung:

Da die Justierschraube einen Sechskantkopf hat, muß die Tonarmlifthöhe mit einem dazu passenden Inbusschlüssel gemessen werden. Hierzu sich die Schraube eignet ebenso gut.

Vergewissern Sie sich, daß der Sechskantkopf in die Tonarmlifthöhe zu schlecht, wenn dieses Werkzeug fehlen.

Justierung des Antiskating-Einstellers

Stellen Sie den Antiskating-Einsteller auf den gleichen Wert ein, wie den Auflagedruck. (Vgl. Abb. 12.)

Justierung der Tonarmhöhe (Vgl. Abb. 22.)

Die Tonarmhöhe kann mittels eines Justierhebels, dessen Skala in Stufen von 0.5 mm unterteilt ist, um bis zu 6 mm reguliert werden. Nehmen Sie die Justierung gemäß nachstehender Tabelle vor.

Tonarmhöhe (mm)	Stellenwert des Justierhebels
15	0
16	1
17	2
18	3
19	4
20	5
21	6

Falls die Tonarmhöhe beispielsweise 17.5 mm beträgt, sollte der Justierhebel zwischen den Skalenwerten 2 und 3 eingestellt werden. (Vgl. Abb. 22.)

Anleitung:

Nach erfolgter Tonarmhöhe-Justierung muß der Tonarmlift durch Drehen des Tonarmlift-Einstellknopfes in die Ausrichtung eingestellt werden.

■ JUSTIERUNGEN (Elektrisch)

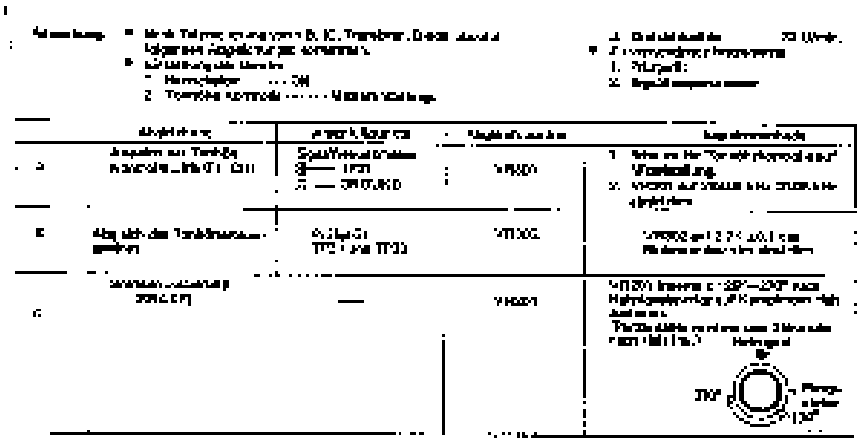

■ RÉGLAGES

Réglage d'écart (mise au point exacte de la vitesse) (Voir Figs. 18 et 19.)

Lorsque le bouton de réglage d'écart est réglé à la position centrale une fois l'alimentation mise en marche, l'indicateur à diode électroluminescente (LED) vert s'éclaire pour indiquer la condition de fonctionnement de la vitesse préétablie (soit 33 1/3 ou 45 tr/min). Le réglage d'écart est ajustable dans une plage d'à peu près ±3%.

Les mises au point dans de la table sont basées sur la graduation de l'indicateur. Les chiffres sur l'indicateur montrent des pourcentages approximatifs pour un réglage d'écart variable.

Lorsque les points stroboscopiques sur les quatre graduations du bord périphérique du plateau semblent être immobiles, la vitesse des écarts individuels se représente. (Voir Fig. 19.)

Note:

L'éclairage stroboscopique de cet appareil utilise un illuminateur stroboscopique à diodes électroluminescentes (LED) synchronisé avec une fréquence à quartz précise.

Pour une mise au point exacte de la vitesse du plateau, assurer d'effectuer le réglage sous l'éclairage de la diode électroluminescente.

L'éclairage à diodes doit être différent de celui synchronisé avec l'utilisation de lampes fluorescentes.

Mise au point de la hauteur de l'élévateur du bras (Voir Figs. 20 et 21.)

La hauteur de l'élévateur du bras (distance entre l'extrémité de la pointe de lecture et la surface du disque lorsque le levier de pose du bras en position relevée) a été réglée en usine sans son calage sur une valeur approximative de 8 – 13 mm.

Si l'écartement devient trop étroit ou trop large, tourner la vis de réglage dans le sens des aiguilles d'une montre ou en sens inverse, tout en abaissant l'élévateur du bras.

Rotation dans le sens des aiguilles d'une montre.
— La distance entre la surface du disque et l'extrémité de la pointe de lecture diminue.

Rotation dans le sens contraire des aiguilles d'une montre.
— La distance entre la surface du disque et l'extrémité de la pointe de lecture augmente.

Note:

Comme le clé de réglage possède une tête hexagonale, s'assurer d'utiliser la mise au point tout en abaissant l'élévateur du bras, sinon le clé ne bougera pas librement.

Vérifier aussi que la tête hexagonale se monte correctement dans l'élévateur du bras quand ce dernier est levé.

Mise au point de la hauteur du bras de lecture (Voir Fig. 22.)

La hauteur du bras de lecture peut être réglée jusqu'à 6 mm et une graduation est disposée sur la cage de réglage par augmentation de 0,5 mm. S'assurer de régler correctement la hauteur du bras en utilisant la graduation de la cage et en se référant au tableau ci-dessous.

Hauteur du bras de lecture (mm)	Lecture de la graduation sur la cage de réglage de la hauteur du bras
15	0
16	1
17	2
18	3
19	4
20	5
21	6

Par exemple, si la hauteur de la cellule de lecture est de 17,5 mm, la cage de réglage de la hauteur du bras doit être positionnée à l'emplacement intermédiaire entre les lectures de la graduation 2 et 3 indiquées sur la graduation. (Voir Fig. 22.)

Attention:

Si vous de bloquer le bras de lecture en tournant la molette de blocage du bras dans la direction indiquée par la flèche, après avoir terminé la mise au point de la hauteur du bras de lecture.

■ RÉGLAGES (Electricité)

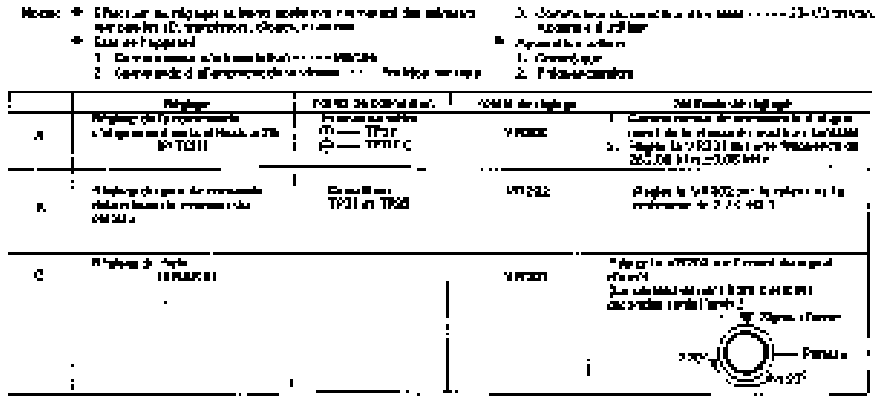

Schematic Diagram

(This schematic diagram may be modified at any time with the development of new technology.)

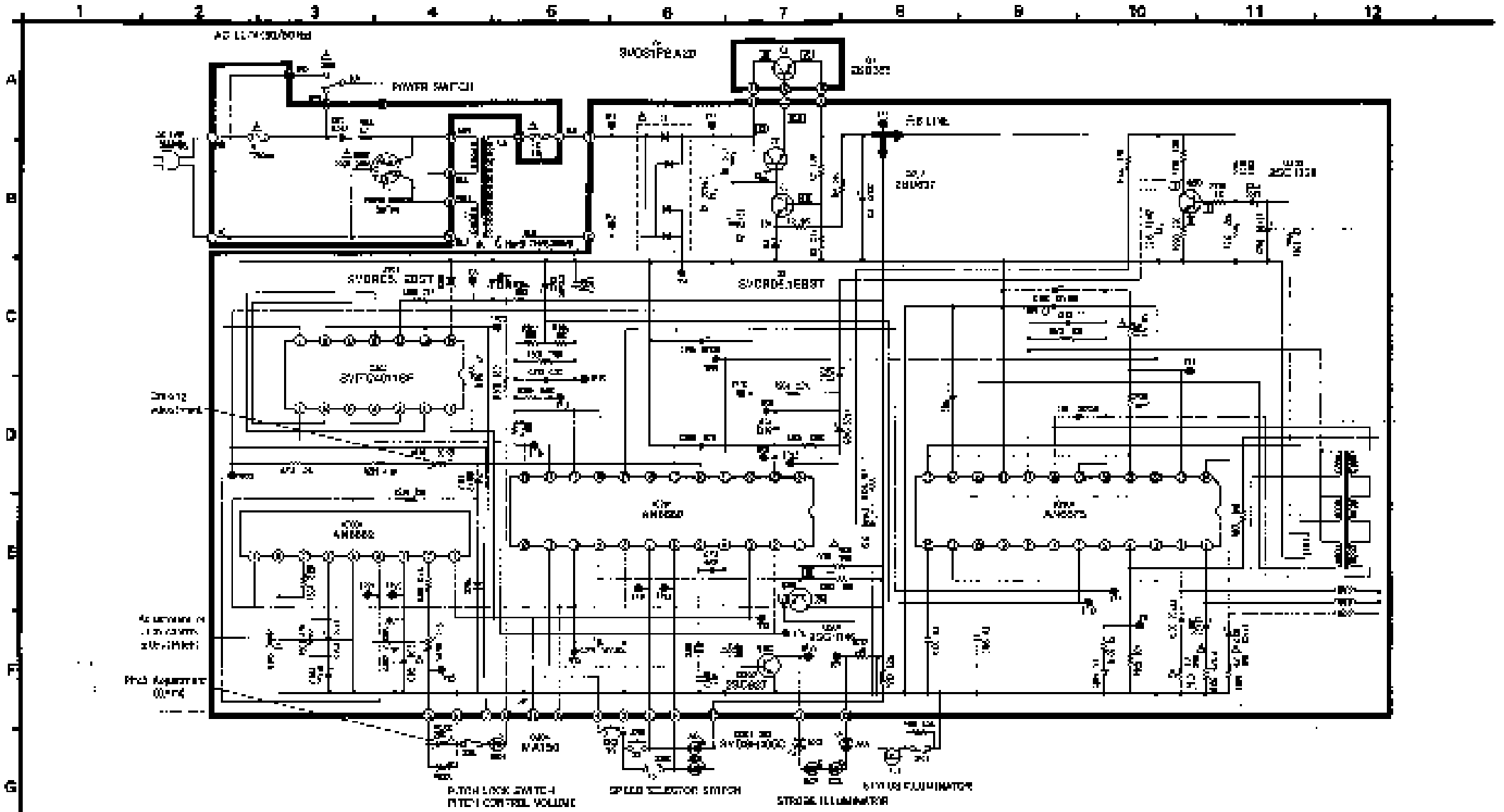

■ TERMINAL GUIDE OF TRANSISTOR AND IC

AN6675	AN6590	AN6582	SVITCAD118P	2SC1844	2SC1729	2SD637	2SD389
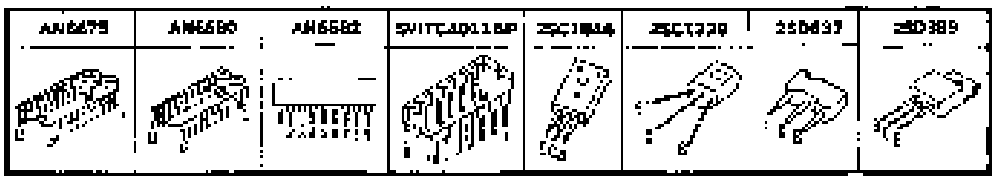							

NOTE:

1. SW01: Speed selector switch (33⅓/45 rpm) in "OFF" position (anti-skate off)
2. SW02: Speed switch in "OFF" position (stroboscopic light)
3. SW03: Strobe switch in "OFF" position, not pushed (stroboscopic light)
4. SW04: Pitch lock switch in "OFF" position (normal position)
5. SW05: Stroboscopic light switch in "OFF" position
6. SW06: Power switch in "OFF" position
7. SW07: Power voltage switch in "220–240V" position

8. The circuit diagram IC voltage and waveform are not included in this schematic diagram.
9. [illegible]
10. ⚠ [illegible] Use only parts specified by the manufacturer to avoid fire or injury.

REPLACEMENT PARTS LIST (Electrical)

Notes: 1. Part numbers are indicated on most mechanical parts.
Please use this number for new orders.
2. ⚠ indicates that only parts specified by manufacturer be used for safety.
3. SL-1200MK2 (XG) → [XG], SL-1200MK2 (XA) → [XA], SL-1200MK2 (XSB) → [XSB]
SL-1200MK2 (XAL) → [XAL], SL-1200MK2 (E) → [E]

Ref. No.		Part No.	Part Name & Description
INTEGRATED CIRCUITS			
IC101		AN6675	Integrated Circuit
IC202		AN6680	Integrated Circuit
IC301		AN6682	Integrated Circuit
IC303		SN11C0011BP	Integrated Circuit
TRANSISTORS			
Q1		2SD1864 C	Transistor
Q2, 3, 302		2SD1047	Transistor
Q301		2SD1864 B	Transistor
Q303		2SD1047 T	Transistor
DIODES			
D1	⚠	EVD84RB440	Rectifier
D2, 301		MA1061	Diode, Zener 6.1 V
D224		MA198A	Diode
D201, 202		SVD5R-1030	Light Emitting Diode
D203~205		SVD5B956C5	Light Emitting Diode
D304		SVD10_02P02	Light Emitting Diode
CRYSTAL			
X101		SVGL000115	Crystal, 4.194304 MHz Oscillator
VARIABLE RESISTORS			
VR201		EVL5RAA103B54	Rotary Attenuator (10kΩ×2), (VR201 (B))
VR301		EVM6G5A00B53	Adjustment of Pitch Control (EVM7YP10F), 45 (P.28)
VR302		EVL5RAA103B54	Pitch Adjustment (Gain: 50kΩ)
VR303		EVUJ0C10A88	Pitch Control Volume
SWITCHES			
S201		EVQ-P7R04K	Switch, Speed Selector (33-1/3 r.p.m.)
S202		EVQ-P7R04K	Switch, Speed Selector (45 r.p.m.)
S203		SFDS5G01-10K	Switch, Sym/Stop
S301		SFDS2P001-1	Switch, Signal Limiter
S101	⚠	SFDS5G01L135	Switch, Power
S102	⚠	SFDSFC001317	Switch, Power Source
LAMP			
PL1		SFDN1120-01	Lamp, Strobo Illumination
TRANSFORMER			
T1	⚠	SJTF900	Power Transformer
FUSE			
F1	⚠	XBA2C0D07TA	Fuse, T250 mA
F2	⚠	XBA2C10T4D	Fuse, T1A
RESISTORS			
R1		ERDS2FJ682	Carbon, 6.8kΩ, 1/4W, ± 5%
R2		ERDS2FJ682	Carbon, 6.8kΩ, 1/4W, ± 5%
R3		ERDS2FJ272	Carbon, 2.7kΩ, 1/4W, ± 5%
R4		ERDS2FJ561	Carbon, 560Ω, 1/4W, ± 5%
R5		ERDS2FJ471	Carbon, 470Ω, 1/4W, ± 5%
R101		ERDS2FJ103	Carbon, 10kΩ, 1/4W, ± 5%
R102	⚠	ERX1AMJ181	Metal Film, 180Ω, 1W, ± 5%
R103		ERDS2FJ473	Carbon, 47kΩ, 1/4W, ± 5%
R104		ERDS2FJ473	Carbon, 47kΩ, 1/4W, ± 5%
R105		ERDS2FJ103	Carbon, 10kΩ, 1/4W, ± 5%
R106		ERDS2FJ150	Carbon, 15Ω, 1/4W, ± 5%

Ref. No.		Part No.	Part Name & Description
R107	⚠	ERX1AMJ105	Metal Film, 1.0Ω, 1W, ± 5%
R108		ERDS2FJ103	Carbon, 10kΩ, 1/4W, ± 5%
R109, 110	⚠	ERX1AMJ4R7	Metal Film, 4.7Ω, 1W, ± 5%
R201	⚠	ERG1AMJ561	Metal Oxide, 560Ω, 1W, ± 5%
R202		ERDS2FJ103	Carbon, 10kΩ, 1/4W, ± 5%
R203		ERDS2FJ474	Carbon, 470kΩ, 1/4W, ± 5%
R204		ERDS2FJ272	Carbon, 2.7kΩ, 1/4W, ± 5%
R205		ERDS2FJ124	Carbon, 120kΩ, 1/4W, ± 5%
R206		ERDS2FJ183	Carbon, 18kΩ, 1/4W, ± 5%
R207		ERDS2FJ562	Carbon, 5.6kΩ, 1/4W, ± 5%
R208		ERDS2FJ224	Carbon, 220kΩ, 1/4W, ± 5%
R209		ERDS2FJ104	Carbon, 100kΩ, 1/4W, ± 5%
R210		ERDS2FJ183	Carbon, 18kΩ, 1/4W, ± 5%
R211		ERDS2FJ103	Carbon, 10kΩ, 1/4W, ± 5%
R212		ERDS2FJ221	Carbon, 220Ω, 1/4W, ± 5%
R213		ERDS2FJ122	Carbon, 1.2kΩ, 1/4W, ± 5%
R214		ERDS2FJ223	Carbon, 22kΩ, 1/4W, ± 5%
R215		ERDS2FJ472	Carbon, 4.7kΩ, 1/4W, ± 5%
R216		ERDS2FJ184	Carbon, 180kΩ, 1/4W, ± 5%
R217		ERDS2FJ223	Carbon, 22kΩ, 1/4W, ± 5%
R218		ERDS2FJ102	Carbon, 1kΩ, 1/4W, ± 5%
R219		ERDS2FJ332	Carbon, 3.3kΩ, 1/4W, ± 5%
R220		ERDS2FJ221	Carbon, 220Ω, 1/4W, ± 5%
R221		ERDS2FJ471	Carbon, 470Ω, 1/4W, ± 5%
R301		ERX1SCK1R33M	Metal Film, 0.33Ω, 1/4W, ± 1%
R302		ERDS2FJ471	Carbon, 470Ω, 1/4W, ± 5%
R303		ERDS2FJ822	Carbon, 8.2kΩ, 1/4W, ± 5%
R304		ERDS2FJ152	Carbon, 1.5kΩ, 1/4W, ± 5%
R305		ERDS2FJ223	Carbon, 22kΩ, 1/4W, ± 5%
R306		ERDS2FJ472	Carbon, 4.7Ω, 1/4W, ± 5%
CAPACITORS			
C1		ECEA1HS471	Electrolytic, 470μF, 50V
C2		ECEA1V330	Electrolytic, 33μF, 35V
C3		ECEA1E220	Electrolytic, 22μF, 25V
C101, 102		ECEA1V330	Electrolytic, 33μF, 35V
C103		ECEA1V330	Electrolytic, 33μF, 35V
C104, 105		ECQM1H104KZ	Polyester, 0.1μF, 50V, ±10%
C106, 107		ECQM1H104KZ	Polyester, 0.1μF, 50V, ±10%
C108		ECEA1E101	Electrolytic, 100μF, 25V
C109, 110		ECQM1H104KZ	Polyester, 0.1μF, 50V, ±10%
C111		ECQM1H682KZ	Polyester, 0.006μF, 50V, ±10%
C112		ECEA1J0R47	Electrolytic, 0.47μF, 63V
C201		ECEA1C330	Electrolytic, 33μF, 16V
C202, 203		ECEA0J1	Electrolytic, 1μF, 6.3V
C204		ECQM1H473KZ	Polyester, 0.047μF, 50V, ±10%
C205		ECEA1A220	Electrolytic, 22μF, 10V
C206		ECEA50J1	Electrolytic, 1μF, 50V
C207		ECCD1H101K	Ceramic, 100pF, 50V, ±10%
C208		ECCD1H390K	Ceramic, 39pF, 50V, ±10%
C209		ECEA1E101	Electrolytic, 100μF, 16V
C210		ECQM1H274KZ	Polyester, 0.27μF, 50V, ±10%
C211		ECQM1H473KZ	Polyester, 0.047μF, 50V, ±10%
C212		ECEA50J33	Electrolytic, 33μF, 50V
C213		ECCD1H471K	Ceramic, 470pF, 50V, ±10%
C214		ECEA1E101	Electrolytic, 100μF, 25V
C215		ECEA50J1	Electrolytic, 1μF, 50V
C216		ECEA1E470	Electrolytic, 47μF, 25V
C301, 302	⚠	ECQK1103JF2	Polyester, 0.010μF, 250V, ± 5%
C303		ECEA50J1	Electrolytic, 1μF, 50V
C304		ECEA1H6100	Electrolytic, 10μF, 50V
C305		ECQM1H102KZ	Polyester, 0.001μF, 50V, ± 10%
C306		ECEA50J1	Electrolytic, 1μF, 50V
C801		ECKD3A472KB	Ceramic, 0.0047μF, 400V, ±20%

■ TROUBLE SHOOTING

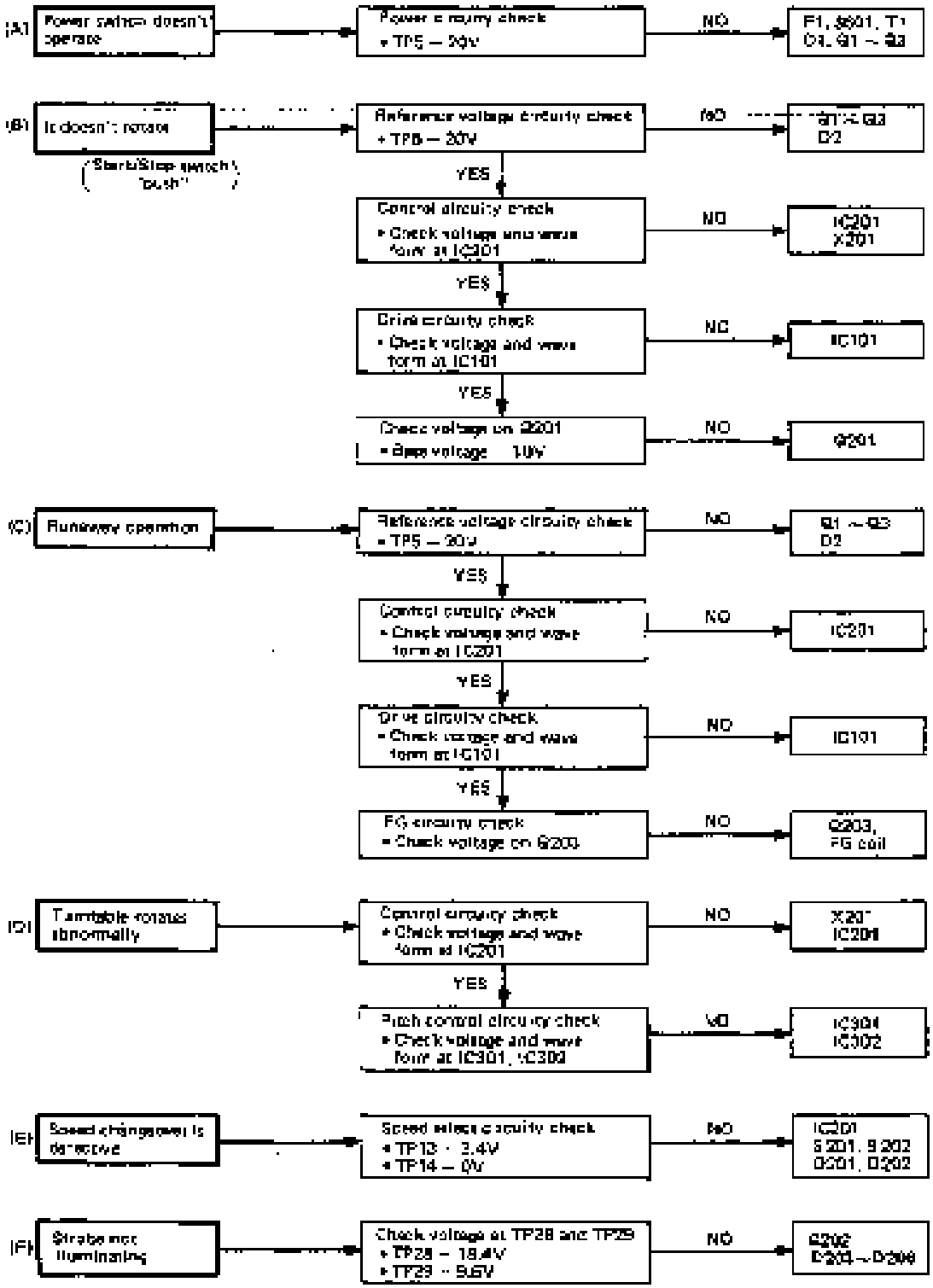

Printed Circuit Board

+ B'line
Earth (Ground) line

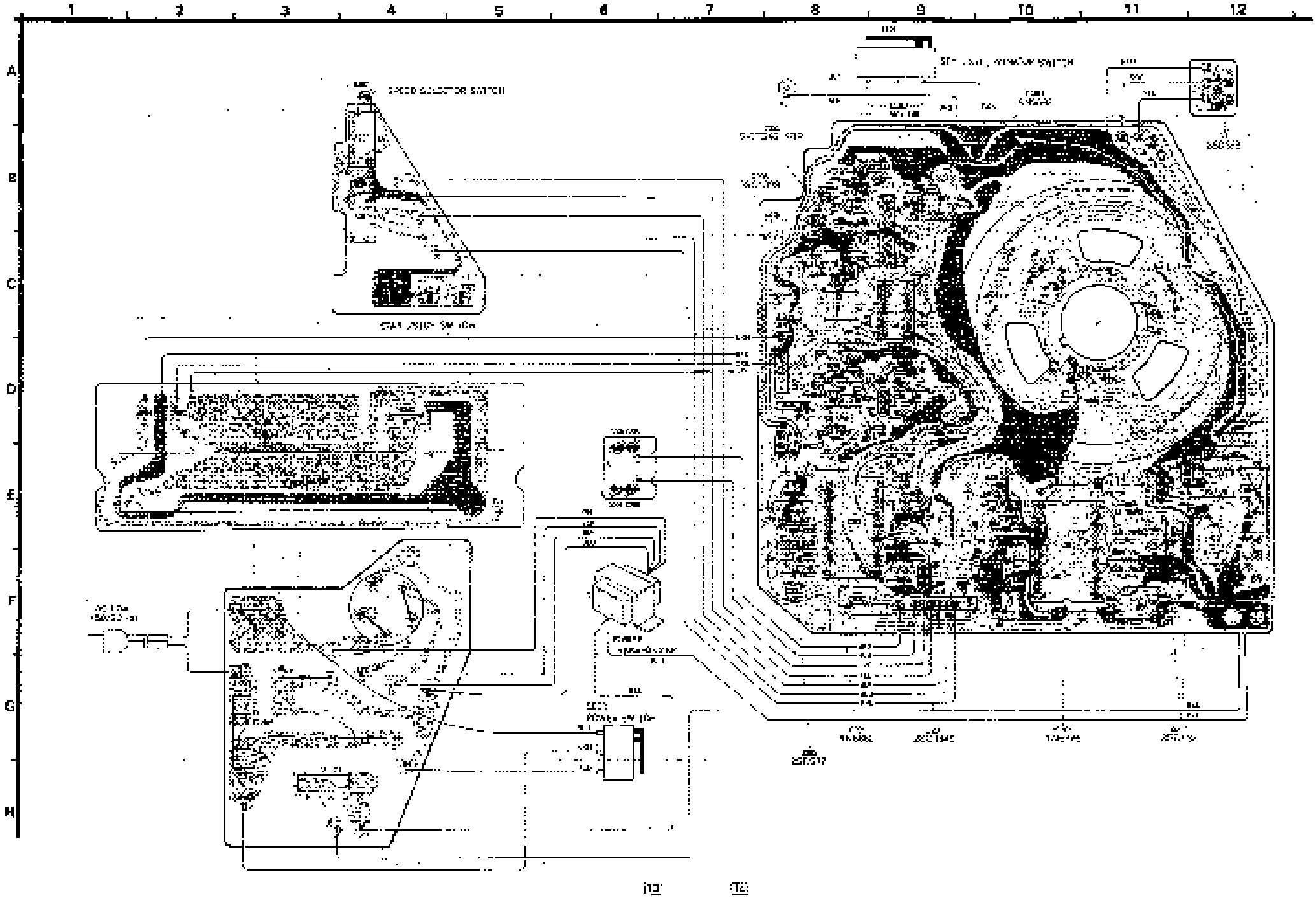

■ BLOCK DIAGRAM

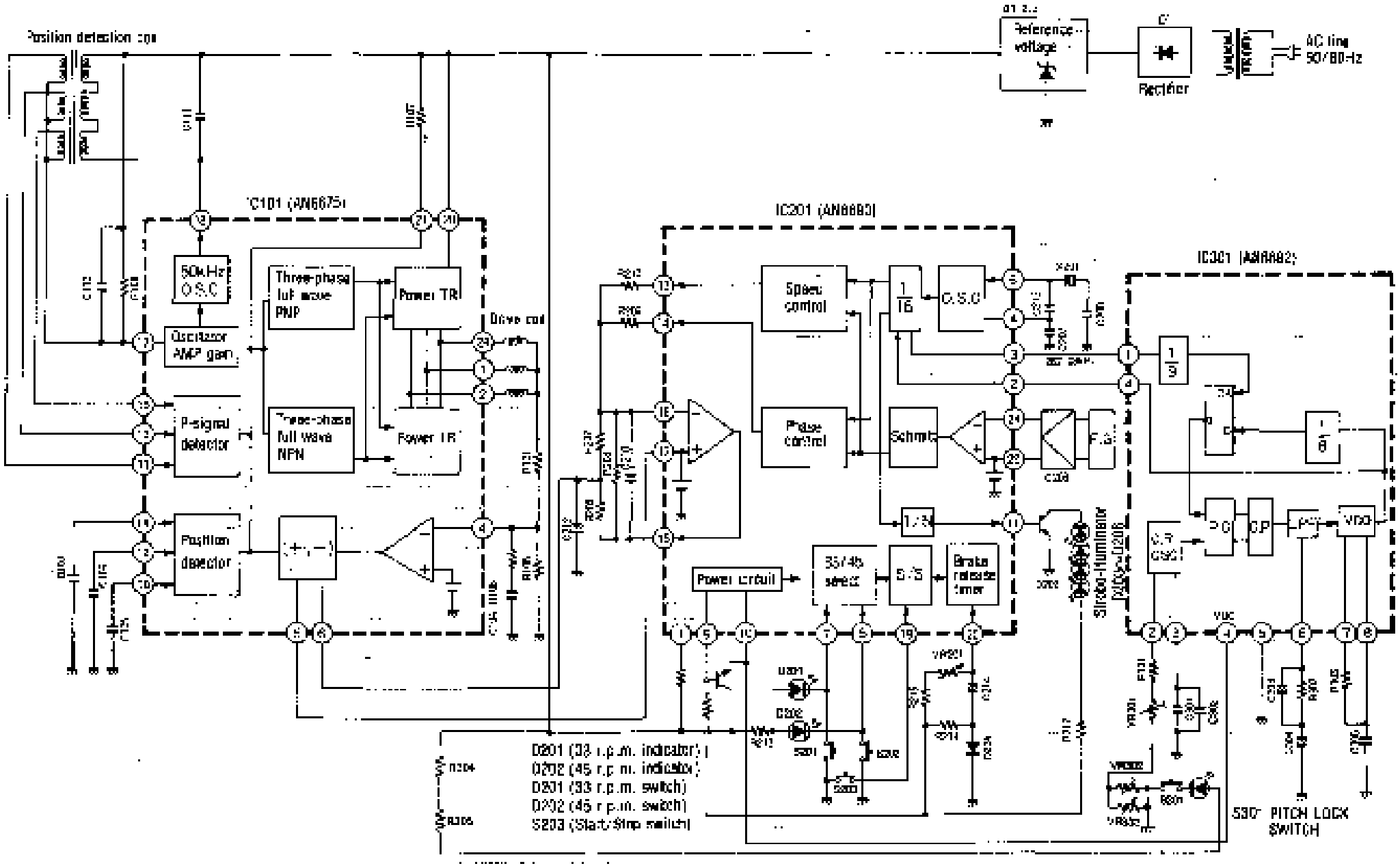

■ ADJUSTMENT (Electrical)

Notes ■ Make the following adjustments after replacing parts such as IC's, transistors, diodes, etc.
- Condition of the set.
  1. Power switch ..... ON
  2. Pitch control ..... Center position
  3. Speed selector switch ..... 33-1/3 r.p.m.
- Instruments to be used
  1. Tester
  2. Frequency counter

	Adjustment	Connection Points	Adjustment Point	Adjustment Method
A	Adjustment of pitch control (ON) (PITCH)	Frequency counter ⊕ — TP27 ⊖ — GROUND	VR301	1. Pitch control switch to center position. 2. Adjust VR301 for 283.08 kHz ±0.05 kHz of frequency.
B	Adjustment of pitch control span	Tester TP31 and TP32	VR302	Adjust VR302 for 2.7 kΩ ±0.1 of resistance value
C	Braking adjustment (BRAKE)		VR201	Adjust VR201 for complete stop within 120° ~ 270° after stop signal initiated. (Turntable becomes free a few seconds after stop)

■ REFERENCE VOLTAGE AND WAVEFORM AT EACH IC

PIN

[illegible]

	Start	Stop		Start	Stop		Start	Stop
[illegible]	2V	2V	[illegible]		15V	[illegible]	Same as at right	
[illegible]	2V	2V						
[illegible]	0V	0V						
[illegible]	5V	5V	[illegible]			[illegible]	20V	20V
[illegible]	5V	0V				[illegible]	30V	30V
[illegible]	5V	1.6V	[illegible]	15V	15V	[illegible]	20V	20V
[illegible]	0V	0V				[illegible]	1.2V	1.2V
[illegible]	5V	5V	[illegible]			[illegible]	20V	20V
[illegible]	0V	0V				[illegible]	1.2V	1.2V
[illegible]		15V	[illegible]	0V	0V			
[illegible]			[illegible]	15V	15V			

[illegible]

	Start	Stop		Start	Stop		Start	Stop
[illegible]	2.5V	2.5V	[illegible]	0V	0V	[illegible]	5V	2.5V
[illegible]	Same as at right		[illegible]	9.8V	9.8V	[illegible]	5V	5V
[illegible]			[illegible]	10V	10V	[illegible]	0V	0V
[illegible]	Same as at right		[illegible]	Same as at right		[illegible]	7.5V	0V
						[illegible]	0V	5V
						[illegible]	1.5V	0V
[illegible]	0V	0V	[illegible]	0V	0V	[illegible]	5V	5V
[illegible]	Same as at right		[illegible]		0.5V	[illegible]		5V
[illegible]	Same as at right		[illegible]			[illegible]	2.8V	2.8V
[illegible]	2.4V	2.4V	[illegible]		4V			
[illegible]	0V	0V						

[illegible]

	Start	Stop		Start	Stop		Start	Stop
[illegible]	Same as at right		[illegible]	Same as at right		[illegible]	Same as at right	
[illegible]	Same as at right		[illegible]	5V	0V	[illegible]	5V	5V
			[illegible]	5.5V	5.5V			
[illegible]	Same as at right		[illegible]	Same as at right				

[illegible]

	Start	Stop		Start	Stop		Start	Stop
[illegible]	Same as at right		[illegible]	Same as at right		[illegible]	5V	5V
[illegible]	5V	5V	[illegible]	5V	5V	[illegible]	5V	5V
[illegible]	Same as at right		[illegible]	0V	0V	[illegible]	5V	5V
			[illegible]	Same as at right		[illegible]	0.6V	0.6V
[illegible]	5V	5V				[illegible]	0.6V	0.6V
						[illegible]	5V	5V

[illegible]

	Start	Stop
[illegible]	0V	5V
[illegible]	Same as at right	
[illegible]	Same as at right	

■ EXPLODED VIEWS

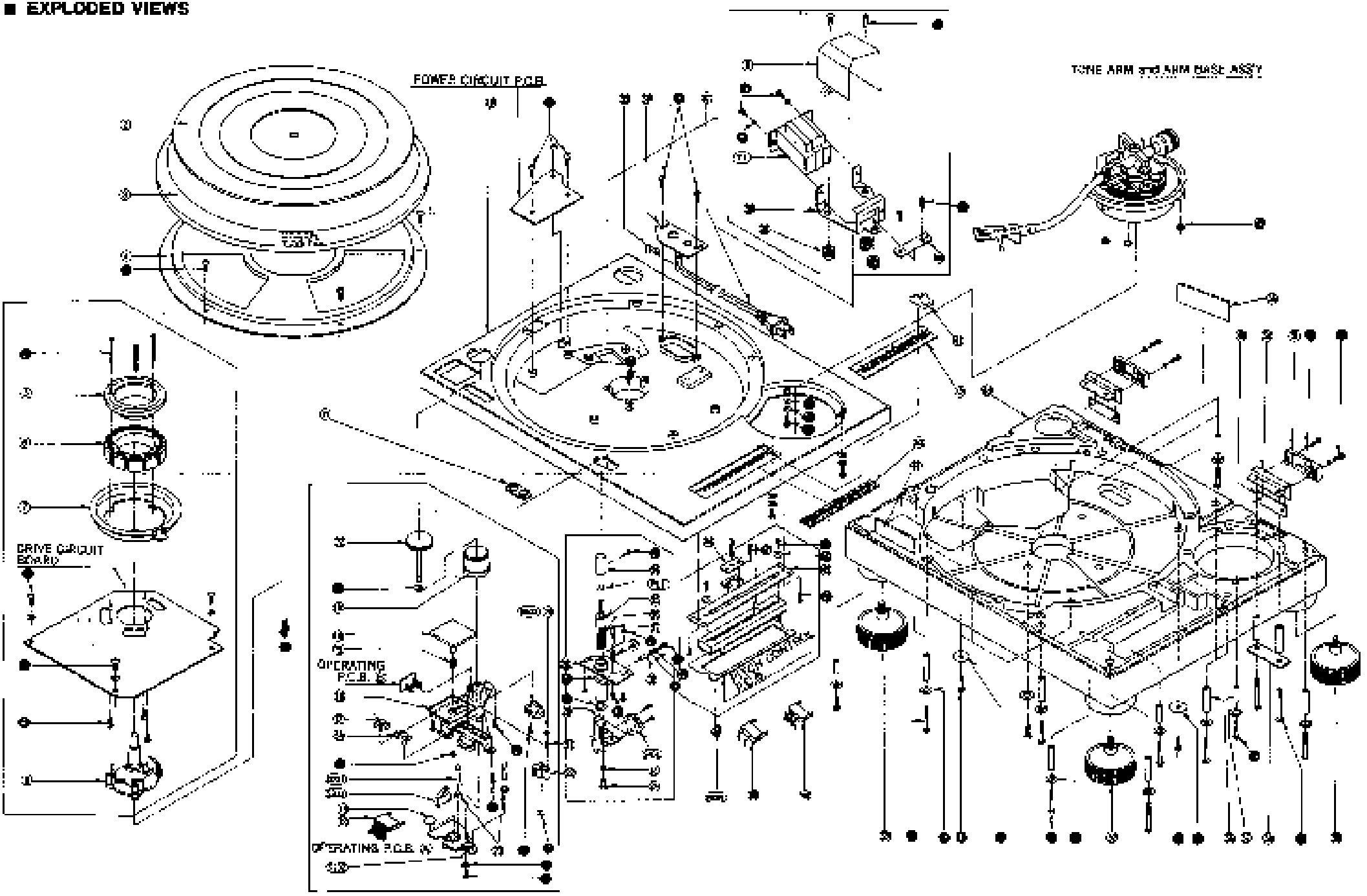

■ REPLACEMENT PARTS LIST (Mechanical)

Notes: 1. [illegible]
[illegible]
2. [illegible] indicates that only parts available by manufacturer be used for service.
3. SL-1200MK2 (XGI) → (XGI), SL-1200MK2 (XAL) → (XAL), SL-1200MK2 (XAL) → (XGI), SL-1200MK2 (XGI) → (XAL)

Ref. No.	Part No.	Part Name & Description
CABINET and CHASSIS PARTS		
[illegible]	[illegible]	[illegible]
TOPPER and DAMPER BASE		
[illegible]	[illegible]	[illegible]

Ref. No.	Part No.	Part Name & Description
[illegible]	[illegible]	[illegible]
SCREWS, WASHERS and CIRCLIPS		
[illegible]	[illegible]	[illegible]
Accessories		
[illegible]	[illegible]	[illegible]
PACKAGES		
[illegible]	[illegible]	[illegible]

■ EXPLODED VIEWS

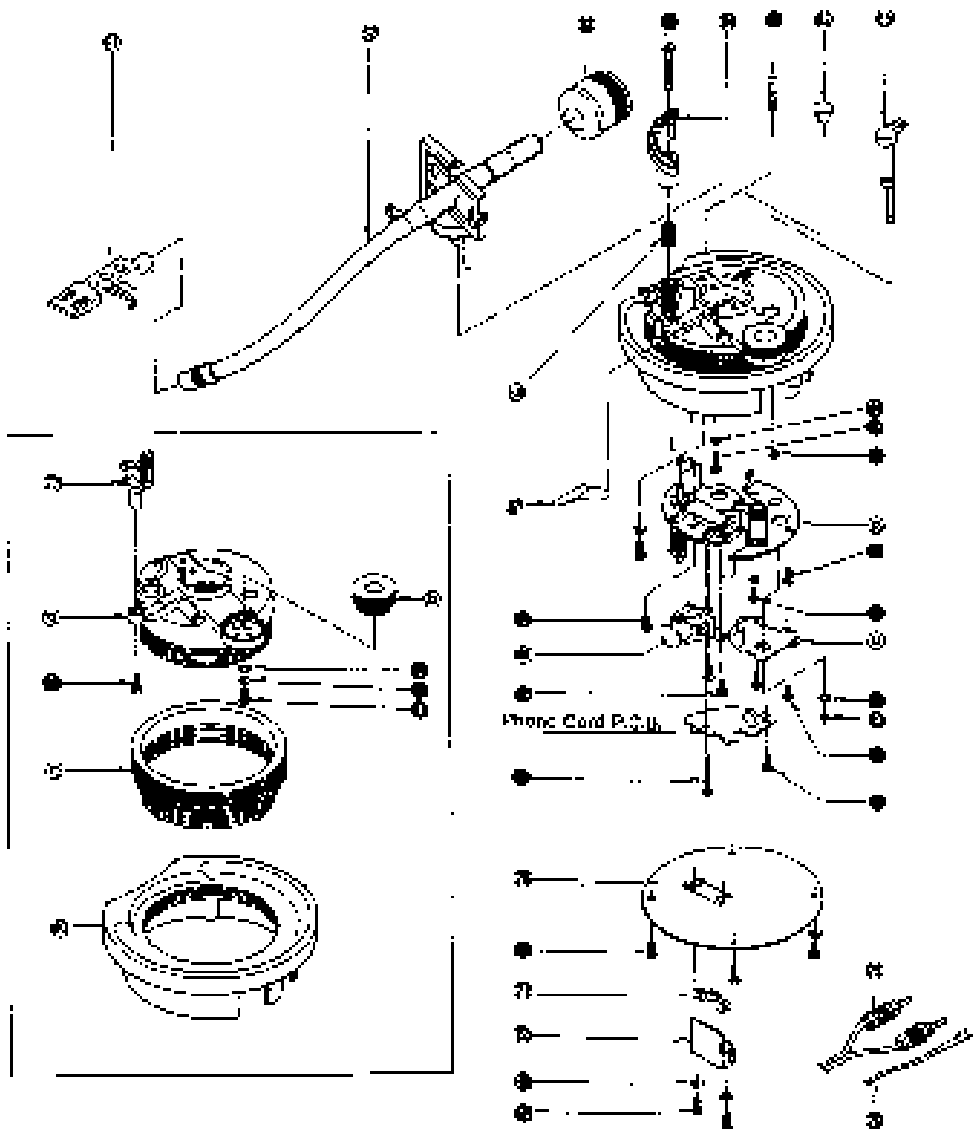

■ FEATURES

Total quartz locked continuous pitch adjustment ±8%

Quartz-locked control maintains stable accuracy of turntable rotation.

But with most quartz turntables, the accurate control must be cut out when the pitch control is employed. With the SL-1200MK2, however, pitch is varied continuously (proportionally) by up to ±8% under total quartz-locked control. The pitch is controlled with a large sliding lever located to the right of the turntable platter.

Four front of platter markings are also provided: indicating +6%, +3.3%, 0% (exact rated speed) and −3.3% change from rated speed.

Aluminum diecast cabinet and special heavy rubber base material provide acoustic isolation

The effects of external vibrations are dramatically reduced in the turntable by the new turntable construction.

The turntable base is precision-made aluminum diecast. And the underside of the main base is made of a heavy rubber material (special one-piece moulding) which has excellent vibration resistance and speaking characteristics.

The turntable platter is also aluminum-diecast with specially fabricated rubber mating in the inner side along with the thick turntable sheet (rubber mat). Four large size insulating feet also help to absorb unwanted vibrations.

These features make SL-1200MK2 ideal for use with extra-high sound pressure levels.

High torque for fast starts

The integral rotor/platter motor delivers 1.5kg-cm (1.5kgf-cm) starting torque. This high torque gives very quick starts enabling the platter to reach 33-1/3 rpm within 0.7 sec. (a quarter of a turn). This is a big advantage in many professional applications where fast cueing is required.

Stylus illuminator for low-light conditions

You'll appreciate the stylus illuminator when you are using the turntable under lowlight conditions. The illuminator can be hidden in the turntable base, should you need it, simply push a button and it will pop up quickly and cast a beam of light across the disc in the area covered by the tonearm.

You can then clearly see the space between the sections on the record, and place the arm exactly where you want it. The illuminator can then be pushed back down into the base.

High sensitivity, low static, gimbal suspension tonearm

The highly sensitive tonearm features a positive gimbal suspension, the rotational center of which is precisely defined at one point. Bearings are finished in a tolerance of ±0.6 microns. This and the semi-sharpness of pivot center to the bearings, result in the minimal friction of 7 mg (0.007 g) for both horizontal and vertical movement. Add to this the low 12-gram effective tonearm mass (including headshell, without cartridge) and you have a tonearm compatible with the wide range of compliances found in today's cartridges. If you choose a popular high compliance MM cartridge, the low mass maximum frequency will appear in the correct area to avoid warp frequencies of records, but without cutting the low end of the audio spectrum. This tonearm is equipped with a computer designed, light weight, high-quality headshell made of single-piece diecast aluminum to resist cartridge vibration. The universal designs allow headshell interchangeability. Connectors are gold-plated.

Helicoid tonearm height adjustment

Arm height is adjustable within a range of 6 mm to accommodate varying cartridge dimensions. Adjustments are done with a precision-made helicoid.

Other fine features

- Quick cues are achieved with a fully electronic braking system.
- A strobe illuminator is provided. The stroboscope is controlled by the extremely stable quartz oscillator, rather than potentially unstable AC line frequency.
- Power cutoff control buttons make illumination for ease of operation.
- Soft-touch start/stop switch allowing precision control capability without the annoyance of accidental movement.
- Technics integral rotor/stator motor construction with half-cycle servo control.

Cross section of SL-1200MK2

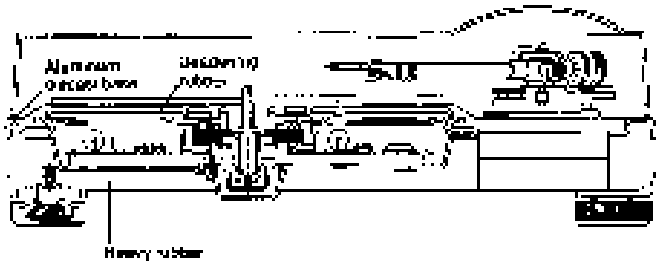

Fig. 24

— NOTE —

Printed in Japan

Panasonic
Technics
Panasonic Service Dokumentations-Center

Schaltungsdienst
Lange o.H.G.
Verlag Technischer Dokumentationen

Postfach 47 06 53
D-1235 15 Berlin

Telefon 0 30/723 61-3
Telefax 0 30/723 61 500