ENCORE FR150Z

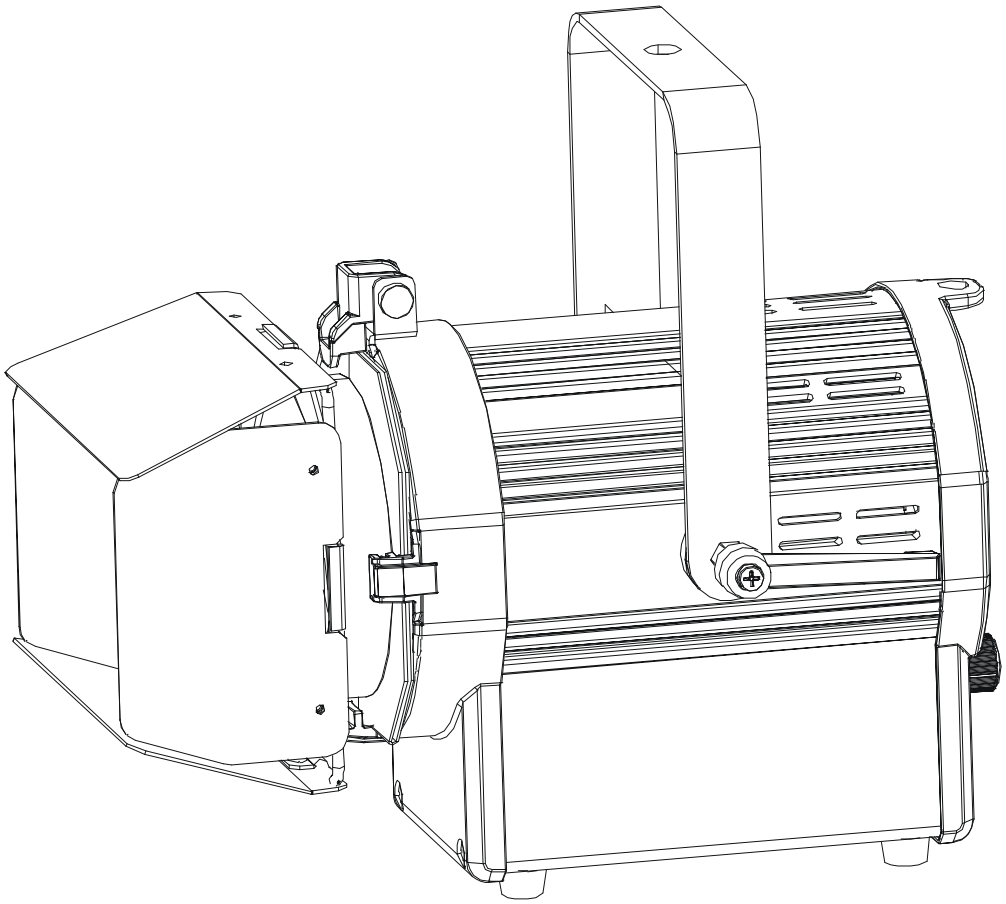

User Instructions

©2017 ADJ Products, LLC all rights reserved. Information, specifications, diagrams, images, and instructions herein are subject to change without notice. ADJ Products, LLC logo and identifying product names and numbers herein are trademarks of ADJ Products, LLC. Copyright protection claimed includes all forms and matters of copyrightable materials and information now allowed by statutory or judicial law or hereinafter granted. Product names used in this document may be trademarks or registered trademarks of their respective companies and are hereby acknowledged. All non-ADJ Products, LLC brands and product names are trademarks or registered trademarks of their respective companies.

ADJ Products, LLC and all affiliated companies hereby disclaim any and all liabilities for property, equipment, building, and electrical damages, injuries to any persons, and direct or indirect economic loss associated with the use or reliance of any information contained within this document, and/or as a result of the improper, unsafe, unsufficient and negligent assembly, installation, rigging, and operation of this product.

DOCUMENT VERSION

Please check www.adj.com for the latest revision/update of this guide.

Date	Document Version	Software Version ≥	DMX Channel Mode	Notes
10/19/17	1	1.03	1/2/3/4	Initial Release
6/26/18	2	1.04	1/2/2-2/3/2-3/4	Added Additional DMX Modes Added Stage 2 Dimmer Curve Added 1.0 Gamma Correction

Europe Energy Saving Notice
Energy Saving Matters (EuP 2009/125/EC)
Saving electric energy is a key to help protecting the enviroment. Please turn off all electrical products when they are not in use. To avoid power consumption in idle mode, disconnect all electrical equipment from power when not in use. Thank you!

Introduction	3
Features	4
Warranty Registration	4
Installation	4
Safety Precautions	5
DMX Set Up	7
System Menu	9
Operating Instructions	10
Master-Slave Configuration	13
DMX Channel Modes	14
Dimmer Curve Chart	15
Dimensional Drawing	17
Warranty	18
Technical Specifications	19

Unpacking: Thank you for purchasing the Encore FR150z by ADJ Products, LLC. Every Encore FR150z has been thoroughly tested and has been shipped in perfect operating condition. Carefully check the shipping carton for damage that may have occurred during shipping. If the carton appears to be damaged, carefully inspect your fixture for any damage and be sure all accessories necessary to operate the unit has arrived intact. In the case damage has been found or parts are missing, please contact our toll free customer support number for further instructions. Do not return this unit to your dealer without first contacting customer support.

Introduction: The ADJ Encore FR150z is a DMX intelligent, high powered LED fresnel fixture. This fixture can be used in a stand alone set up or connected in a Master/Slave set up. The Encore FR150z has two operating modes: dimmer control and DMX controlled. To optimize the performance of this product, please read these operating instructions carefully to familiarize yourself with the basic operations of this unit. These instructions contain important safety information regarding the use and maintenance of this unit. Please keep this manual with the unit, for future reference.

Customer Support: ADJ provides a customer support line, to provide set up help and to answer any question should you encounter problems during your set up or initial operation. You may also visit us on the web at www.adj.com for any comments or suggestions. Service Hours are Monday through Friday 8:00 a.m. to 4:30 p.m. Pacific Standard Time.

Voice: (323) 582-3322
Fax: (323) 582-3108
E-mail: support@AmericanDJ.com

Warning! To prevent or reduce the risk of electrical shock or fire, do not expose this unit to rain or moisture.

Caution! There are no user serviceable parts inside this unit. Do not attempt any repairs yourself, doing so will void your manufactures warranty. In the unlikely event your unit may require service please contact ADJ Products, LLC.

PLEASE recycle the shipping carton when ever possible.

Encore FR150z — Features

- Two Operating Modes
- Electronic Dimming 0-100%
- DMX-512 protocol
- 6 DMX Channel Modes
- 3-Pin & 5-Pin In/Out DMX Connection
- PowerCON In/Out Connection
- USB Data Update
- Gamma Adjustment
- 5 Dimmer Curves
- Multiple Unit Power Linking (See page 15)

Encore FR150z — Warranty Registration

The Encore FR150z carries a 2 year limited warranty. Please fill out the enclosed warranty card to validate your purchase. All returned service items whether under warranty or not, must be freight pre-paid and accompany a return authorization (R.A.) number. The R.A. number must be clearly written on the outside of the return package. A brief description of the problem as well as the R.A. number must also be written down on a piece of paper included in the shipping carton. If the unit is under warranty, you must provide a copy of your proof of purchase invoice. You may obtain a R.A. number by contacting our customer support team on our customer support number. All packages returned to the service department not displaying a R.A. number on the outside of the package will be returned to the shipper.

Encore FR150z — Installation

The unit should be mounted using a mounting clamp (not provided), affixing it to the mounting bracket that is provided with the unit. Always ensure that the unit is firmly fixed to avoid vibration and slipping while operating. Always ensure that the structure to which you are attaching the unit is secure and is able to support a weight of 10 times the unit's weight. Also, always use a safety cable that can hold 12 times the weight of the unit when installing the fixture.
The equipment must be installed by a professional, and it must be installed in a place where it is out of the reach of people's grasp.

- To reduce the risk of electrical shock or fire, do not expose this unit rain or moisture
- Do not spill water or other liquids into or on to your unit.
- Do not attempt to operate this unit if the power cord has been frayed or broken. Do not attempt to remove or break off the ground prong from the electrical cord. This prong is used to reduce the risk of electrical shock and fire in case of an internal short.
- Disconnect from main power before making any type of connection.
- Do not remove the cover under any conditions. There are no user serviceable parts inside.
- Never operate this unit when it's cover is removed.
- Never plug this unit in to a dimmer pack
- Always be sure to mount this unit in an area that will allow proper ventilation. Allow about 6" (15cm) between this device and a wall.
- Do not attempt to operate this unit, if it becomes damaged.
- This unit is intended for indoor use only, use of this product outdoors voids all warranties.
- During long periods of non-use, disconnect the unit's main power.
- Always mount this unit in safe and stable matter.
- Power-supply cords should be routed so that they are not likely to be walked on or pinched by items placed upon or against them, paying particular attention to the point they exit from the unit.
- Cleaning -The fixture should be cleaned only as recommended by the manufacturer. See page 15 for cleaning details.
- Heat -The appliance should be situated away from heat sources such as radiators, heat registers, stoves, or other appliances (including amplifiers) that produce heat.
- The fixture should be serviced by qualified service personnel when:
  A. The power-supply cord or the plug has been damaged.
  B. Objects have fallen, or liquid has been spilled into the fixture.
  C. The fixture has been exposed to rain or water.
  D. The fixture does not appear to operate normally or exhibits a marked change in performance.
  E. The fixture has fallen and/or subjected to extreme handling.

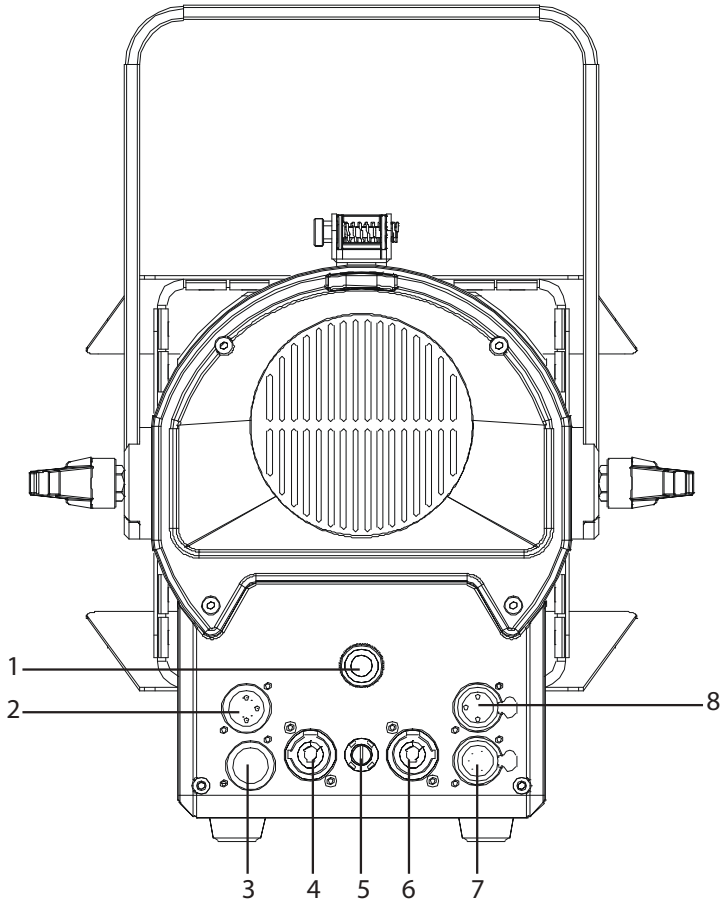

1. Zoom Adjustment Knob
2. 3-Pin DMX In
3. 5-Pin DMX In
4. PowerCON In
5. Fuse
6. PowerCON Out
7. 5-Pin DMX Out
8. 3-Pin DMX Out
9. Mode Button
10. USB Port
11. Enter Button
12. LCD Menu Control Display
13. Down Button
14. Up Button
15. Barn Door Secure Lock
16. Gel Frame

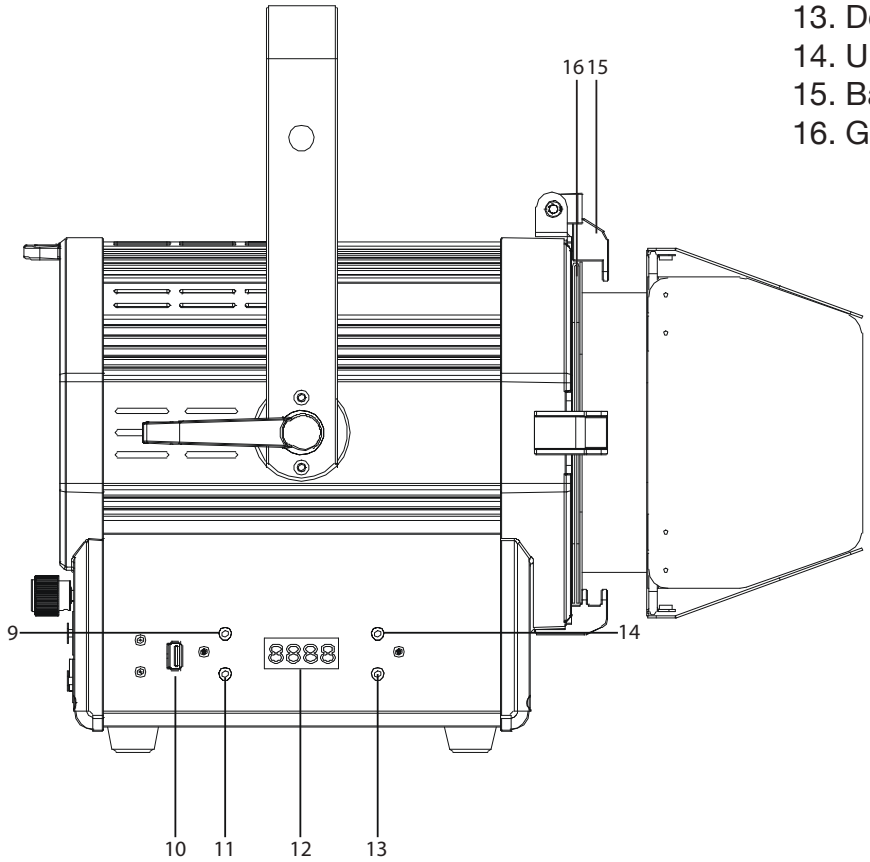

P**ower Supply:** The ADJ Encore FR150z contains a automatic voltage switch, which will auto sense the voltage when it is plugged into the power source. With this switch there is no need to worry about the correct power voltage, this unit can be plugged in anywhere.

DMX-512: DMX is short for Digital Multiplex. This is a universal protocol used as a form of communication between intelligent fixtures and controllers. A DMX controller sends DMX data instructions from the controller to the fixture. DMX data is sent as serial data that travels from fixture to fixture via the DATA “IN” and DATA “OUT” XLR terminals located on all DMX fixtures (most controllers only have a DATA “OUT” terminal).

DMX Linking: DMX is a language allowing all makes and models of different manufactures to be linked together and operate from a single controller, as long as all fixtures and the controller are DMX compliant. To ensure proper DMX data transmission, when using several DMX fixtures try to use the shortest cable path possible. The order in which fixtures are connected in a DMX line does not influence the DMX addressing. For example; a fixture assigned a DMX address of 1 may be placed anywhere in a DMX line, at the beginning, at the end, or anywhere in the middle. When a fixture is assigned a DMX address of 1, the DMX controller knows to send DATA assigned to address 1 to that unit, no matter where it is located in the DMX chain.

Data Cable (DMX Cable) Requirements (For DMX Operation): The Encore FR150z can be controlled via DMX-512 protocol. The Encore FR150z has 6 DMX channel modes. The DMX address is set on the back panel of the Encore FR150z. Your unit and your DMX controller require a standard 3-pin XLR connector for data input and data output (Figure 1). We recommend Accu-Cable DMX cables. If you are making your own cables, be sure to use standard 110-120 Ohm shielded cable (This cable may be purchased at almost all pro lighting stores). Your cables should be made with a male and female XLR connector on either end of the cable. Also remember that DMX cable must be daisy chained and cannot be split.

Figure 1

Notice: Be sure to follow figures two and three when making your own cables. Do not use the ground lug on the XLR connector. Do not connect the cable’s shield conductor to the ground lug or allow the shield conductor to come in contact with the XLR’s outer casing. Grounding the shield could cause a short circuit and erratic behavior.

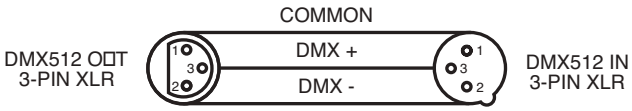

Figure 2

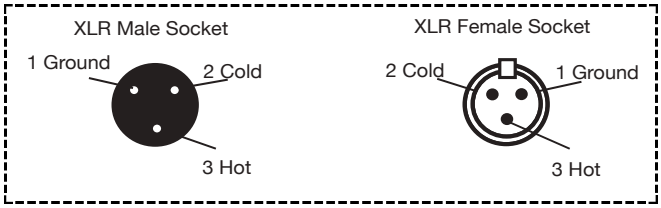

XLR Pin Configuration
Pin 1 = Ground
Pin 2 = Data Compliment (negative)
Pin 3 = Data True (positive)

Figure 3

Special Note: Line Termination. When longer runs of cable are used, you may need to use a terminator on the last unit to avoid erratic behavior. A terminator is a 110-120 ohm 1/4 watt resistor which is connected between pins 2 and 3 of a male XLR connector (DATA + and DATA -). This unit is inserted in the female XLR connector of the last unit in your daisy chain to terminate the line. Using a cable terminator (ADJ part number Z-DMX/T) will decrease the possibilities of erratic behavior.

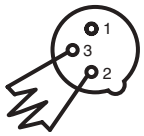

Termination reduces signal errors and avoids signal transmission problems and interference. It is always advisable to connect a DMX terminal, (Resistance 120 Ohm 1/4 W) between PIN 2 (DMX-) and PIN 3 (DMX +) of the last fixture.

Figure 4

5-Pin XLR DMX Connectors. Some manufactures use 5-pin DMX-512 data cables for DATA transmission in place of 3-pin. 5-pin DMX fixtures may be implemented in a 3-pin DMX line. When inserting standard 5-pin data cables in to a 3-pin line a cable adaptor must be used, these adaptors are readily available at most electric stores. The chart below details a proper cable conversion.

3-Pin XLR to 5-Pin XLR Conversion		
Conductor	3-Pin XLR Female (Out)	5-Pin XLR Male (In)
Ground/Shield	Pin 1	Pin 1
Data Compliment (- signal)	Pin 2	Pin 2
Data True (+ signal)	Pin 3	Pin 3
Not Used		Do Not Use
Not Used		Do Not Use

Specifications are subject to change without any prior written notice				
MENU	**SUBMENU**	**OPTIONS** (Default Settings in **BOLD**)		**DESCRIPTION**
Opening Display	Update Wait … WELCOME EFR150Z V1.04			Start Up Display
Interface Display	ADDR:001 CH:02			Main Display
MENU Set ADDR	Set ADDR 001	001-509		DMX Addressing
MENU User Mode	1/ 2 /2 - 2/ 3/ 2 - 3/4CH			DMX Channel Mode Selection
MENU Function	NO DMX	Lost Dmx	Black/Hold	DMX Lost Status
	LCD.Set	Display Key Lock Flash	ON/OFF ON/OFF ON/OFF	Display Settings
	Temp	Celsius Fahren		Temperature Setting
	Dim Curve	Standard Stage TV Architec Theatre Stage 2		Dimming Curve Modes
	Disp.Set	ADDR Disp. CH Slave	ON/OFF ON/OFF ON/OFF	Main Display Setting
	Gamma	1.0/2.0/2.2/2.4/2.8		Gamma Brightness
	USB Data Off	ON/OFF		Software Upload
	DFSE	ON/OFF		Return to Default Settings
MENU Info	Time Info	Current		Current Running Time (Hours)
		TotalTim		Total Running Time (Hours)
				Last Running Time Cleared (Hours)
		Timer Pin		Clear Running Time (Password=050) ON/OFF
	TempInfo	Temp Info		Current LED Temperature
	Err. Info	TempErr		Error Information
	Model Inf	Encore FR150Z		Model Identification
	Software	V1.04		Current Software Version
MENU Manual	ManCtrl	Dimmer=XXX Strobe=XXX		Manual Control Mode

DMX Addressing:

Operating through a DMX controller gives the user the freedom to create their own programs tailored to their own individual needs.

1. To run your fixture in DMX mode press the UP or DOWN buttons until “Set ADDR” is displayed. Press the ENTER button and “Set ADDR XXX” will be displayed. “XXX” represents the current displayed address.
2. Use the UP or DOWN buttons to find your desired DMX address and press ENTER to save the address.
3. Please see page 14 for DMX values and traits.
4. After you have chosen your desired DMX Channel mode (see below) plug in the fixture via the XLR connections to any standard DMX controller.

DMX Channel Mode:

The Encore FR150z has 6 DMX channel modes. This submenu will allow you to choose the DMX channel mode you like the unit to operate under.

1. To select your desired DMX channel mode press the MODE button until “UserMode” is displayed. Press the ENTER button and the current DMX channel mode will be displayed.
2. Use the UP or DOWN buttons to find your desired DMX channel mode and press ENTER to save the mode.
3. Please see page 14 for your selected DMX mode values and traits.
4. After you have chosen your desired DMX Channel mode plug in the fixture via the XLR connections to any standard DMX controller.

DMX State:

This mode can be used as a precaution mode, that in case the DMX signal is lost, the operating mode chosen in the setup is the running mode the fixture will go into when the DMX signal is lost. You can also set this as the operating mode you would like the unit to return to when power is applied.

1. Plug the fixture in and press the UP or DOWN buttons until “Menu Function” is displayed.
2. Press the ENTER button and then use the UP or DOWN buttons to scroll to “NO DMX” and press ENTER. Use the UP or DOWN buttons to toggle between the two choices:
   - “Black” (Blackout) - If the DMX signal is lost or interrupted, the unit will automatically go into stand by mode.
   - “Hold” (Last State) - If the DMX signal is lost or interrupted, the fixture will stay in the last DMX set up.
3. Once you have found your desired mode, press ENTER, and press MODE to exit.

LCD Set Up - In this submenu you are able to adjust the settings for the LCD display. You can program the display to blackout after 30 seconds, lock the buttons, or make the display flash.

1. Plug the fixture in and press the UP or DOWN buttons until “Menu Function” is displayed.
2. Press the ENTER button and press the UP or DOWN buttons to scroll to “LCD.Set” and press ENTER.
3. Use the UP or DOWN buttons to make your desired adjustments in each submenu. Press the ENTER button to move to the next adjustment submenu.
4. Press the MODE button to exit and return to the main menu.

Unit Temperature - With this function, you can switch the temperature setting between Celsius or Fahrenheit.

1. Plug the fixture in and press the UP or DOWN buttons until “Menu Function” is displayed.
2. Press the ENTER button and press the UP or DOWN buttons to scroll to “TEMP” and press ENTER.
3. Use the UP or DOWN buttons to switch between “Celsius” or “Fahren”.
4. Press ENTER to confirm your selection or press the MODE button to exit and return to the main menu.

Dimmer Curve Setting:

1. Plug the fixture in and press the UP or DOWN buttons until “Menu Function” is displayed.
2. Press the ENTER button and then use the UP or DOWN buttons to scroll to “DimCurve” and press ENTER.
3. There are 6 dimmer curve settings to choose from. Use the UP and DOWN buttons to scroll through the different dimmer curve setting. See the Dimmer Curve Diagram Chart on page 14 to see the different settings and their respective beginning and ending fade times.
4. Press the MODE button to exit and return to the main menu.

Display Set Up - In this submenu you are able to select what main display will show. In this sub-menu you are also able to designate the unit as the “Slave” in Master-Slave configuration.

1. Plug the fixture in and press the UP or DOWN buttons until “Menu Function” is displayed.
2. Press the ENTER button and press the UP or DOWN buttons to scroll to “Disp.Set” and press ENTER.
3. Use the UP or DOWN buttons to find you desired setting and press ENTER.
4. Press the MODE button to exit and return to the main menu.

Gamma Correction - With this function, you can optimze the brightness of the fixture. This is used mainly when recording with an HD video camera. The brightness will be slight to the naked eye, but looking through the lens of a camera it will be noticable.

1. Plug the fixture in and press the UP or DOWN buttons until “Menu Function” is displayed.
2. Press the ENTER button and press the UP or DOWN buttons to scroll to “Gamma” and press ENTER.
3. Use the UP or DOWN buttons to switch between the different gamma settings.
4. Press ENTER to confirm your selection or press the MODE button to exit and return to the main menu.

Software Update (USB Data) - This submenu is used for any future software updates. Check www.adj.com and this units webpage for any software updates. Download the software update to a flash stick and plug the flash stick into the Flash Drive slot located on the side of the unit.

1. Contact ADJ customer service for help when updating software.

Default Running Mode:
This is a default running mode. When this mode is activated all modes will return to their default settings.

1. Plug the fixture in and press the UP or DOWN buttons until “Menu Function” is displayed, and press ENTER.
2. Press the UP or DOWN buttons to scroll to “DFSE” and press ENTER.
3. Press the UP and DOWN buttons to switch between “ON” or “OFF”. To reset the unit to factory settings select “ON” and press ENTER. Press the MODE button to exit the submenu with no changes.

Time Infomation - In this submenu you are able to check the current running time, total running time, last time the running time was cleared, and clear the running time.

1. Plug the fixture in and press the UP or DOWN buttons until “Info” is displayed.
2. Press the ENTER button and press the UP or DOWN buttons until “TimeInfo” is displayed, and press ENTER.
3. Use the UP or DOWN buttons to find the time information you would like to check. Press the ENTER button to access your desired time information.
4. To clear the current running time, press UP or DOWN buttons until “TimerPin” is displayed, and press ENTER. Use the UP or DOWN buttons to put in the “Clear” password “050”, a press ENTER. Use the UP or DOWN buttons to select “ON”, and press ENTER. After doing this, unplug the fixture, then plug it back in. The current running time should now be cleared.
5. Press the MODE button to exit and return to the “Infor” menu. Press MODE again to exit and return to the main menu.

Temperature Infomation - In this submenu you are able to check the fixtures current running temperature.

1. Plug the fixture in and press the UP or DOWN buttons until “Info” is displayed.
2. Press the ENTER button and press the UP or DOWN buttons until “TempInfo” is displayed, and press ENTER.
3. Use the UP or DOWN buttons to find the time information you would like to check. Press the ENTER button to access your desired time information.

Software Infomation - In this submenu you are able to check the fixtures current software.

1. Plug the fixture in and press the UP or DOWN buttons until “Info” is displayed.
2. Press the ENTER button and press the UP or DOWN buttons until “Software” is displayed, and press ENTER. The current software version will now be displayed. Press the MODE button to exit.

Manual Dimmer Mode:

1. Plug the fixture in and press the UP or DOWN buttons until “Menu Manual” is displayed and press ENTER.
2. After pressing ENTER, “ManCtrl Dimmer” will be displayed. Press the ENTER button to access the dimmer adjustment submenu.
3. Once you have entered the dimmer adjustment submenu, use the UP and DOWN buttons to adjust the dimmer intensity. When you are finished adjusting the intensity, press ENTER.
4. Press the UP or DOWN buttons to switch “ManCtrl Strobe” and press ENTER. Follow the values listed under the DMX STROBE channel. These values will match with the values in Strobe control.

Master-Slave Configuration:

This function will allows you to link units together to run in a Master-Slave set-up. In a Master-Slave set up one unit will act as the controlling unit and the others will react to the controlling units built-in programs. Any unit can act as a Master or as a Slave however, only one unit can be programmed to act as the “Master.”

Master-Slave Connections and Settings:

1. Daisy chain your units via the XLR connector on the rear of the unit. Use standard XLR data cables to link your units together. Remember that the Male XLR connector is the input and the Female XLR connector is the ouput. The first unit in the chain (master) will use the female XLR connector only. The last unit in the chain will use the male XLR connector only.
2. Connect the first “Slave” unit to the “Master.”
3. Set the “Master” unit to your desired mode of operation. On the “Slave” unit’s press the UP or DOWN buttons until “Function” is displayed, and press ENTER.
4. Press the UP or DOWN buttons until “Disp.Set” is displayed and press ENTER. Press the UP or DOWN buttons until “Slave” is displayed and press ENTER.
5. The “Slave” unit(s) will now follow the “Master”.
6. To exit “Slave” mode, press the MODE button.
7. To fully exit “Slave” mode, you will need to follow steps 3 and 4 and set the display to “ADDR” and press ENTER.

Encore FR150z Zoom Adjustment Knob

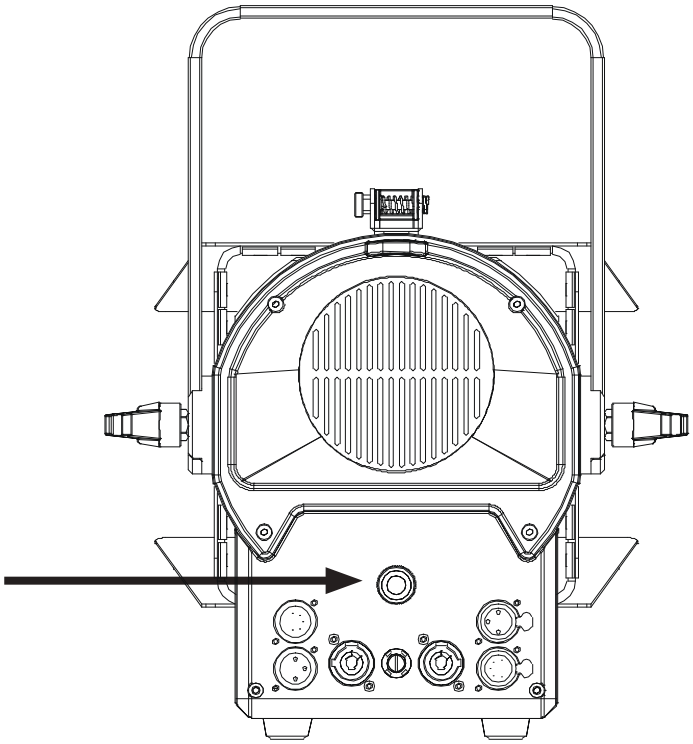

Zoom Adjustment Knob:

Rotate this know counter-clockwise for a wider beam.

Rotate this knob clockwise for narrower beam.

Mode/Channel						Value	Function
1CH	2CH	2-2CH	3CH	2-3CH	4CH		
1	1	1	1	1	1	0-255	Dimmer Master Dim
		2		2	2	0-255	Dimmer Fine 16bit
	2		2		3		Strobe
						0-31	OFF
						32-63	ON
						64-95	Variable Strobe slow to fast
						96-127	ON
						128-159	Pulse Effect slow to fast
						160-191	ON
						192-223	Random Strobe slow to fast
						224-255	ON
			3	3	4		Dim Mode
						0-20	Standard
						21-40	Stage
						41-60	TV
						61-80	Architectural
						81-100	Theatre
						101-120	Stage 2
						121-255	Default to Unit Setting

Encore FR150z — Multiple Unit Power Linking

With this feature you can connect the fixtures to one another using the PowerCON input and output sockets. The maximum that can be connected is 7 fixtures @ 120V and 14 fixtures @ 240V. After the maximum connected fixtures you will need to use a new power outlet.
NOTE: USE CAUTION WHEN POWER LINKING OTHER FIXTURES TO THE ENCORE FR15Z AS THE POWER CONSUMPTION OF OTHER LIGHTING FIXTURES WILL VARY!

Encore FR150z — Dimmer Curve Chart

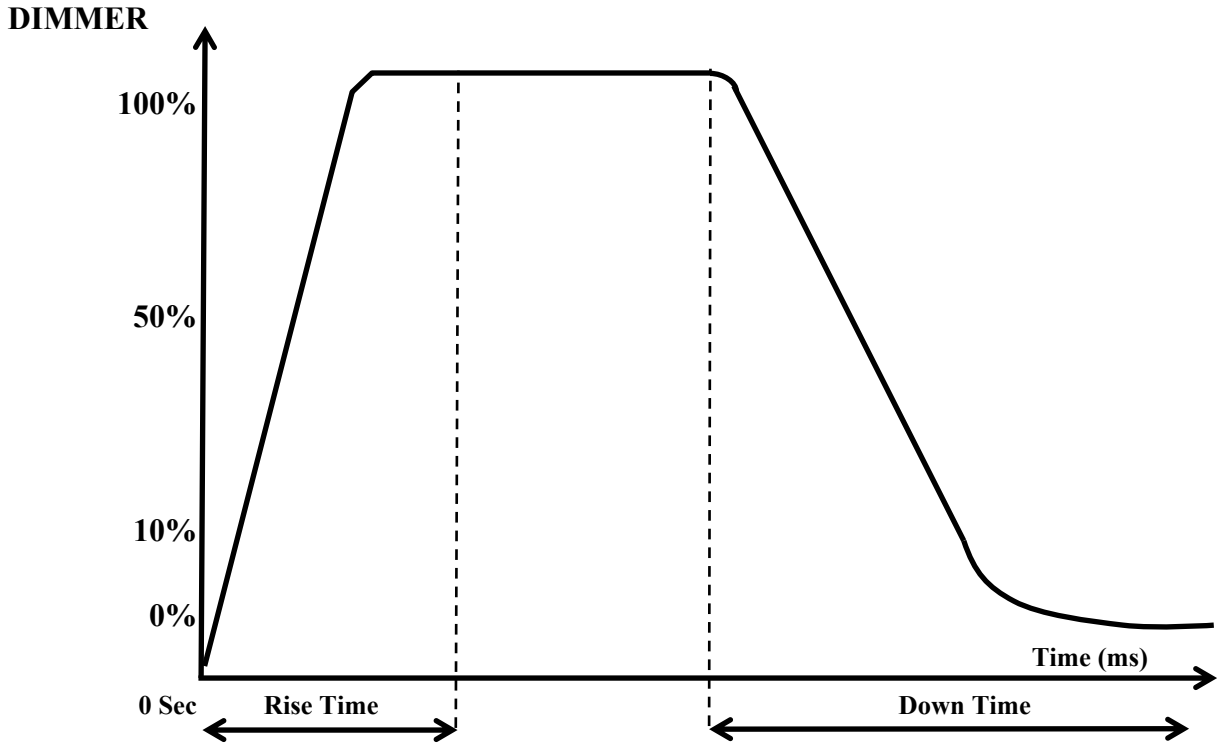

Dimming Curve Ramp Effect	0 sec Fade Time		1 sec Fade Time	
	255 / 0		255 / 0	
	Rise Time (ms)	Down Time (ms)	Rise Time (ms)	Down Time (ms)
Standard (default)	0	0	0	0
Stage	780	1100	1540	1660
TV	1180	1520	1860	1940
Architectural	1380	1730	2040	2120
Theatre	1580	1940	2230	2280
Stage 2	0	1100	0	1660

1. Slide the Gel Frame in from the top and into the 3 Grooves located closest to the unit.

Lock Open

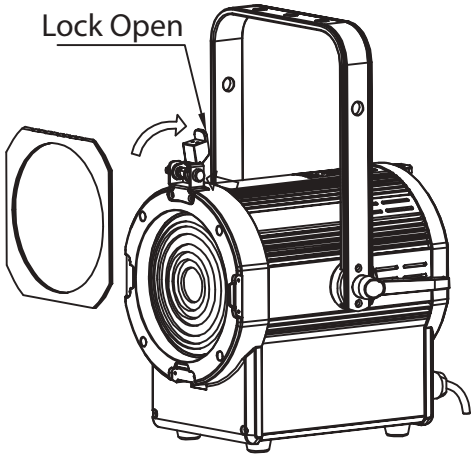

2. Slide the Barn Door in from the top and into the 3 Barn Door Grooves

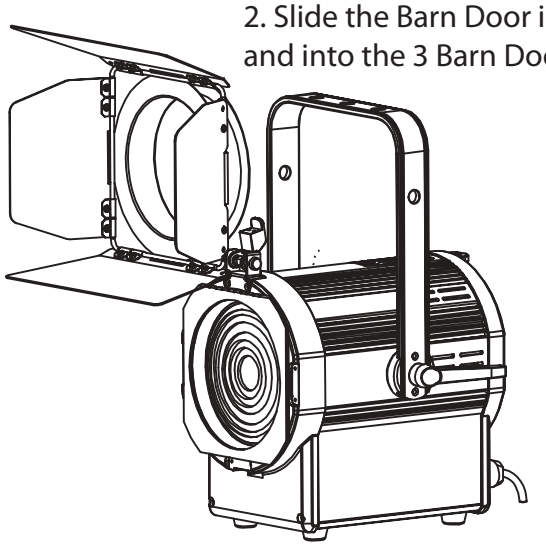

3. Lock Shut Down

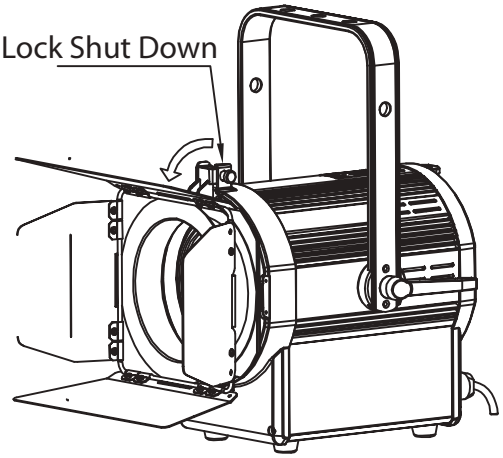

4. Complete

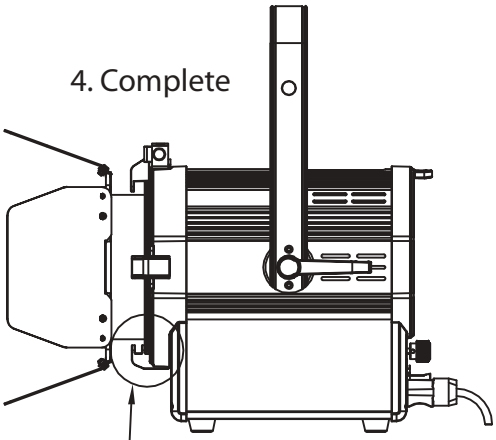

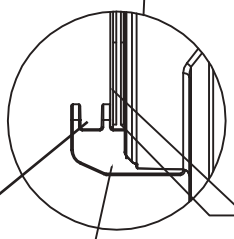

Barn Door Slides into the 3 Grooves
Two on the side, one on the bottom

Gel Frame

Enlarged View

Encore FR150z — Dimensional Drawings

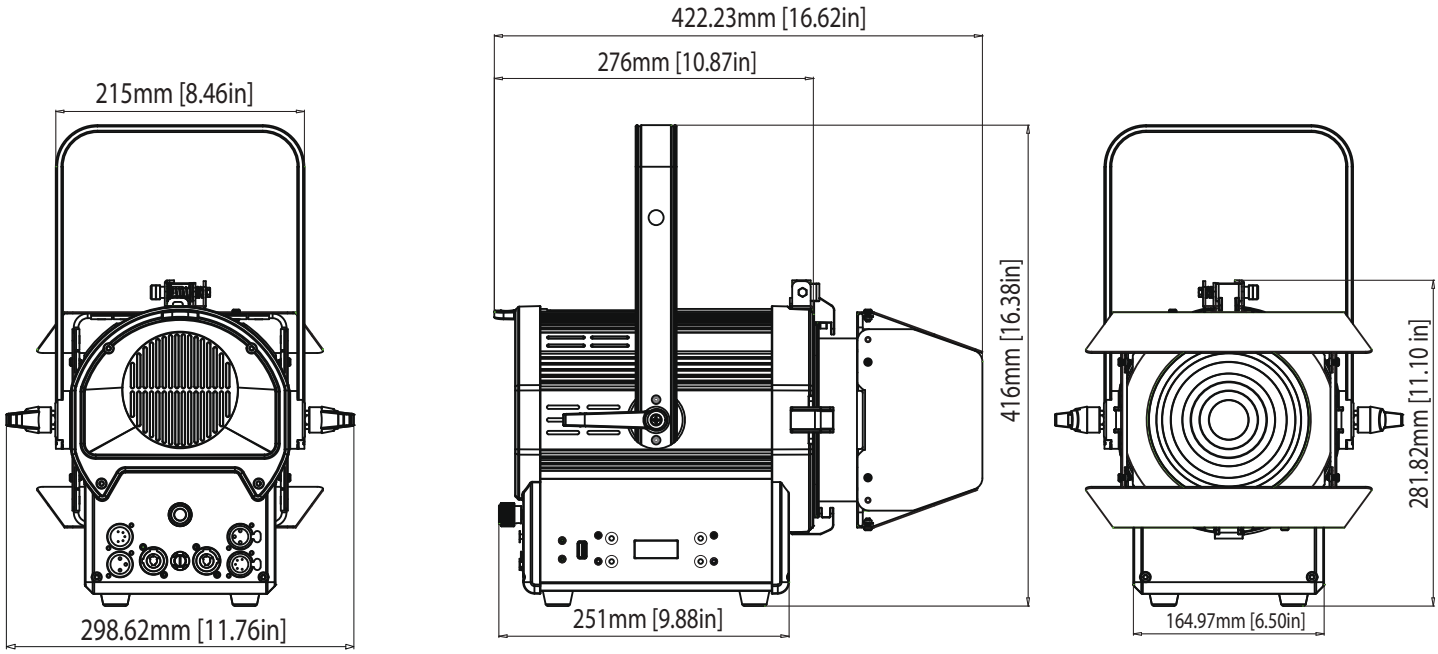

Encore FR150z — Fuse Replacement

Disconnect the unit from its power source. Remove the power cord from the unit. Once the cord has been removed, use a flat-head screw driver to unscrew the fuse holder. Remove the bad fuse and replace it with a new one.

Encore FR150z — Trouble Shooting

Listed below are a few common problems the user may encounter, with solutions.

Unit not responding to DMX:

1. Check that the DMX cables are connected properly and are wired correctly (pin 3 is “hot”; on some other DMX devices pin 2 may be ‘hot’). Also, check that all cables are connected to the right connectors; it does matter which way the inputs and outputs are connected.

Encore FR150z — Cleaning

Due to fog residue, smoke, and dust cleaning the internal and external optical lenses must be carried out periodically to optimize light output.

1. Use normal glass cleaner and a soft cloth to wipe down the outside casing.
2. Clean the external optics with glass cleaner and a soft cloth every 20 days.
3. Always be sure to dry all parts completely before plugging the unit back in.

Cleaning frequency depends on the environment in which the fixture operates (i.e. smoke, fog residue, dust, dew).

MANUFACTURER'S LIMITED WARRANTY

A. ADJ Products, LLC hereby warrants, to the original purchaser, ADJ Products, LLC products to be free of manufacturing defects in material and workmanship for a prescribed period from the date of purchase (see specific warranty period on reverse). This warranty shall be valid only if the product is purchased within the United States of America, including possessions and territories. It is the owner's responsibility to establish the date and place of purchase by acceptable evidence, at the time service is sought.

B. For warranty service you must obtain a Return Authorization number (RA#) before sending back the product–please contact ADJ Products, LLC Service Department at 800-322-6337. Send the product only to the ADJ Products, LLC factory. All shipping charges must be pre-paid. If the requested repairs or service (including parts replacement) are within the terms of this warranty, ADJ Products, LLC will pay return shipping charges only to a designated point within the United States. If the entire instrument is sent, it must be shipped in it's original package. No accessories should be shipped with the product. If any accessories are shipped with the product, ADJ Products, LLC shall have no liability whatsoever for loss of or damage to any such accessories, nor for the safe return thereof.

C. This warranty is void if the serial number has been altered or removed; if the product is modified in any manner which ADJ Products, LLC concludes, after inspection, affects the reliability of the product; if the product has been repaired or serviced by anyone other than the ADJ Products, LLC factory unless prior written authorization was issued to purchaser by ADJ Products, LLC; if the product is damaged because not properly maintained as set forth in the instruction manual.

D. This is not a service contract, and this warranty does not include maintnance, cleaning or periodic check up. During the period specified above, ADJ Products, LLC will replace defective parts at its expense with new or refurbished parts, and will absorb all expenses for warranty service and repair labor by reason of defects in material or workmanship. The sole responsibility of ADJ Products, LLC under this warranty shall be limited to the repair of the product, or replacement thereof, including parts, at the sole discretion of ADJ Products, LLC. All products covered by this warranty were manufactured after August 15, 2012, and bear indentifying marks to that effect.

E. ADJ Products, LLC reserves the right to make changes in design and/or improvements upon its products without any obligation to include these changes in any products theretofore manufactured.

No warranty, whether expressed or implied, is given or made with respect to any accessory supplied with products described above. Except to the extent prohibited by applicable law, all implied warranties made by ADJ Products, LLC in connection with this product, including warranties of merchantability or fitness, are limited in duration to the warranty period set forth above. And no warranties, whether expressed or implied, including warranties of merchantability or fitness, shall apply to this product after said period has expired. The consumer's and/or Dealer's sole remedy shall be such repair or replacement as is expressly provided above; and under no circumstances shall ADJ Products, LLC be liable for any loss or damage, direct or consequential, arising out of the use of, or inability to use, this product.

This warranty is the only written warranty applicable to ADJ Products, LLC Products and supersedes all prior warranties and written descriptions of warranty terms and conditions heretofore published.

MANUFACTURER'S LIMITED WARRANTY PERIODS:

- **Non L.E.D. Lighting Products = 1-year (365 days) Limited Warranty** (Such as: Special Effect Lighting, Intelligent Lighting, UV lighting, Strobes, Fog Machines, Bubble Machines, Mirror Balls, Par Cans, Trussing, Lighting Stands etc. excluding LED and lamps)
- **Laser Products = 1 Year (365 Days) Limited Warranty** (excluding laser diodes which have a 6 month limited warranty)
- **L.E.D. Products = 2-year (730 days) Limited Warranty** (excluding batteries which have a 180 day limited warranty). **Note: 2 Year Warranty only applies to purchases within the United States.**
- **StarTec Series = 1 Year Limited Warranty** (excluding batteries which have a 180 day limited warranty).
- **ADJ DMX Controllers = 2 Year (730 Days) Limited Warranty**

Model: Encore FR150z

Voltage:	100V ~ 240V/50~60Hz
LEDs:	1 x 130W LED
Color Temperature:	3000k
Beam Angle:	8~50 Degrees
Working Position:	Any safe working position
Power Draw:	150W
Power Linking:	7 Fixtures Max. @ 120V 14 Fixtures Max. @ 230V
Fuse:	2A
Weight:	16.5 lbs./ 7.4 Kgs. (w/ Barn Door) 15.1 lbs./ 6.8 Kgs. (w/o Barn Door)
Dimensions:	**With Barn Doors:** 16.62” (L) x 11.76” (W) x 16.38” (H) 422.23 x 298.62 x 416mm **Without Barn Doors:** 10.87” (L) x 11.76” (W) x 16.38” (H) 276 x 298.62 x 416mm
Colors:	Warm White
DMX Channels:	6 DMX Modes: 1/2/2-2/3/2-3/4
Warranty:	2 Year (730 days)

Please Note: Specifications and improvements in the design of this unit and this manual are subject to change without any prior written notice.

Follow Us On:

facebook.com/americandj
twitter.com/americandj
youtube.com/adjlighting

ADJ Products, LLC
6122 S. Eastern Ave. Los Angeles, CA 90040 USA
Tel: 323-582-2650 / Fax: 323-725-6100
Web: www.adj.com / E-mail: info@americandj.com

A.D.J. Supply Europe B.V.
Junostraat 2
6468 EW Kerkrade
Netherlands
service@adjgroup.eu / www.adj.eu
Tel: +31 45 546 85 00 / Fax: +31 45 546 85 99